SERVICE MANUAL

DIGITAL SYNTHESIZER TUNER

SANSUI TU-S77X/S77XW

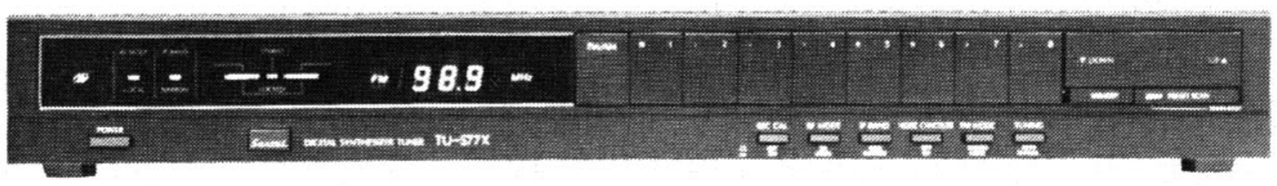

CAUTION

1. Parts identified by the ⚠ symbol on the schematic diagram and the parts list are critical for safety. Use only replacement parts that have critical characteristics recommended by the manufacturer.
2. Make leakage-current or resistance measurements to determine that exposed parts are acceptably insulated from the supply circuit before returning the appliance to the customer.

Sansui

SANSUI ELECTRIC CO., LTD.

•SPECIFICATIONS

FM Section

Tuning range..... 88 to 108 MHz
Usable sensitivity
Mono IHF ..... 10.8 dBf (1.9 μV : T100)
DIN ..... 0.95 μV
50 dB quieting sensitivity
Mono..... 16.2 dBf
Stereo ..... 37.7 dBf
Signal to noise ratio at 85 dBf
Mono..... 90 dB
Stereo ..... 85 dB
Distortion at 65 dBf
Mono..... less than 0.015% at 1,000 Hz
Stereo ..... less than 0.02% at 1,000 Hz
Alternate channel selectivity (at 400 kHz)
NARROW..... 60 dB
Capture ratio ..... 1.0 dB
Image response ratio..... 100 dB
Spurious response ratio.... 100 dB
Stereo separation ..... 60 dB at 1,000 Hz
Frequency response
Stereo ..... 20 to 15,000 Hz
+0.2 dB, —0.5 dB
Antenna input impedance
..... 300 ohms balanced
75 ohms unbalanced

AM Section

Tuning range..... 530 to 1,600 kHz
Usable sensitivity ..... 50 dB/m (316 μV/m)
Signal to noise ratio..... 50 dB
Image response ratio..... 45 dB at 1,000 kHz

Others

Output voltage and impedance
..... 775 mV/2.2 kilohms
Power requirements..... 120/220/240V
50/60 Hz
For U.S.A. and Canada
..... 120V (60 Hz)
Power consumption 13W
Dimensions
w/o sidewood..... 430 mm (16-15/16″)W
57 mm (2-1/4″)H
306 mm (12-1/16″)D
w/ sidewood..... 466 mm (18-3/8″)W
57 mm (2-1/4″)H
306 mm (12-1/16″)D
Weight
w/o sidewood..... 3.5 kg (7.7 lbs) net
4.3 kg (9.5 lbs) packed
w/ sidewood..... 4.0 kg (8.8 lbs) net
4.8 kg (10.6 lbs) packed

* Design and specifications subject to change without notice for improvements.

www.hifiengine.com

CAUTION

1. The symbols, UL, CSA, BS, UK, EU, AS and XX on the parts list and the schematic diagram mean followings respectively.

   UL..... Manufactured for U.S.A market.
   (Underwriters Laboratories approved model.)
   CSA ..... Manufactured for Canadian market.
   BS, UK ..... Manufactured for United Kingdom market.
   EU ..... Manufactured for European market.
   AS..... Manufactured for Australian market.
   XX..... Standard Version.
   NON MARK ..... Common Parts.

2. Some printed circuit boards are not supplied as the assembled. To separate these in this service manual, the stock No's are not indicated at the ends of the board names. However, the individual parts on the circuit boards are provided by orders.

3. Since some of capacitors and resistors are omitted from parts lists in this service manual, refer to the Common Parts List for capacitors & resistors, which was issued on February 1983.

4. Abbreviations in this service manual are as follows.

•Abbreviations List

C.R.	: Carbon Resistor	E.B.	: Bi-Polar Electrolytic Capacitor
S.R.	: Solid Resistor	E.B.L.	: Low Leak Bi-Polar Electrolytic Capacitor
Ce.R.	: Cement Resistor	Ta.C.	: Tantalum Capacitor
M.R.	: Metal Film Resistor	F.C.	: Film Capacitor
F.R.	: Fusing Resistor	M.P.	: Metalized Paper Capacitor
N.I.R.	: Non-Inflammable Resistor	P.C.	: Polystyrene Capacitor
A.R.	: Array Resistor	G.C.	: Gimmic Capacitor
C.C.	: Ceramic Capacitor	A.C.	: Array Capacitor
C.T.	: Ceramic Capacitor, Temoerature Compensation	V.R.	: Variable Resistor
E.C.	: Electrolytic Capacitor	S.V.R.	: Semi Variable Resistor
E.L.	: Low Leak Electrolytic Capacitor	SW.	: Switch

www.hifiengine.com

1. BLOCK DIAGRAM

1-1. RF, IF & Control Section

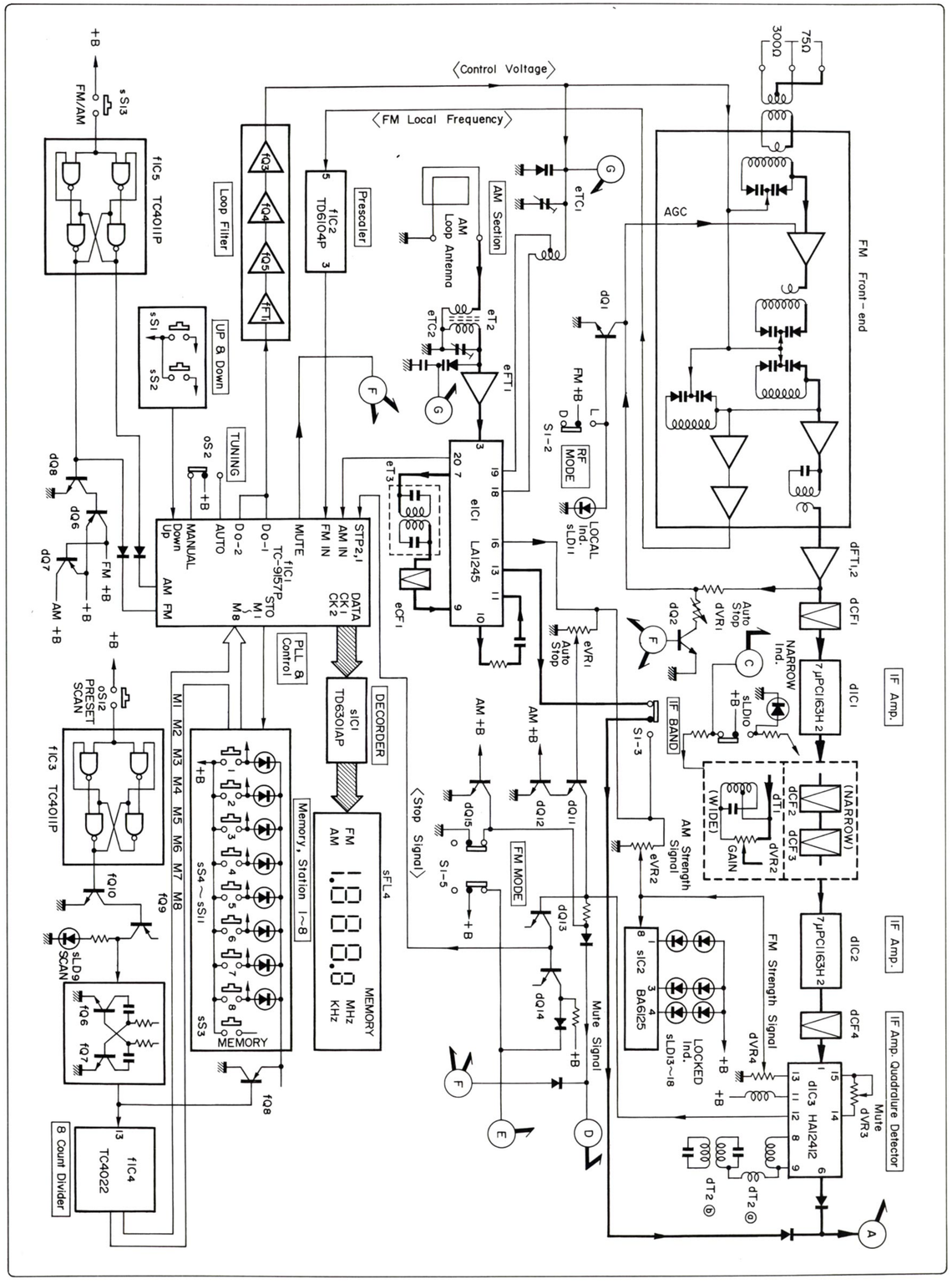

1-2. MPX Section

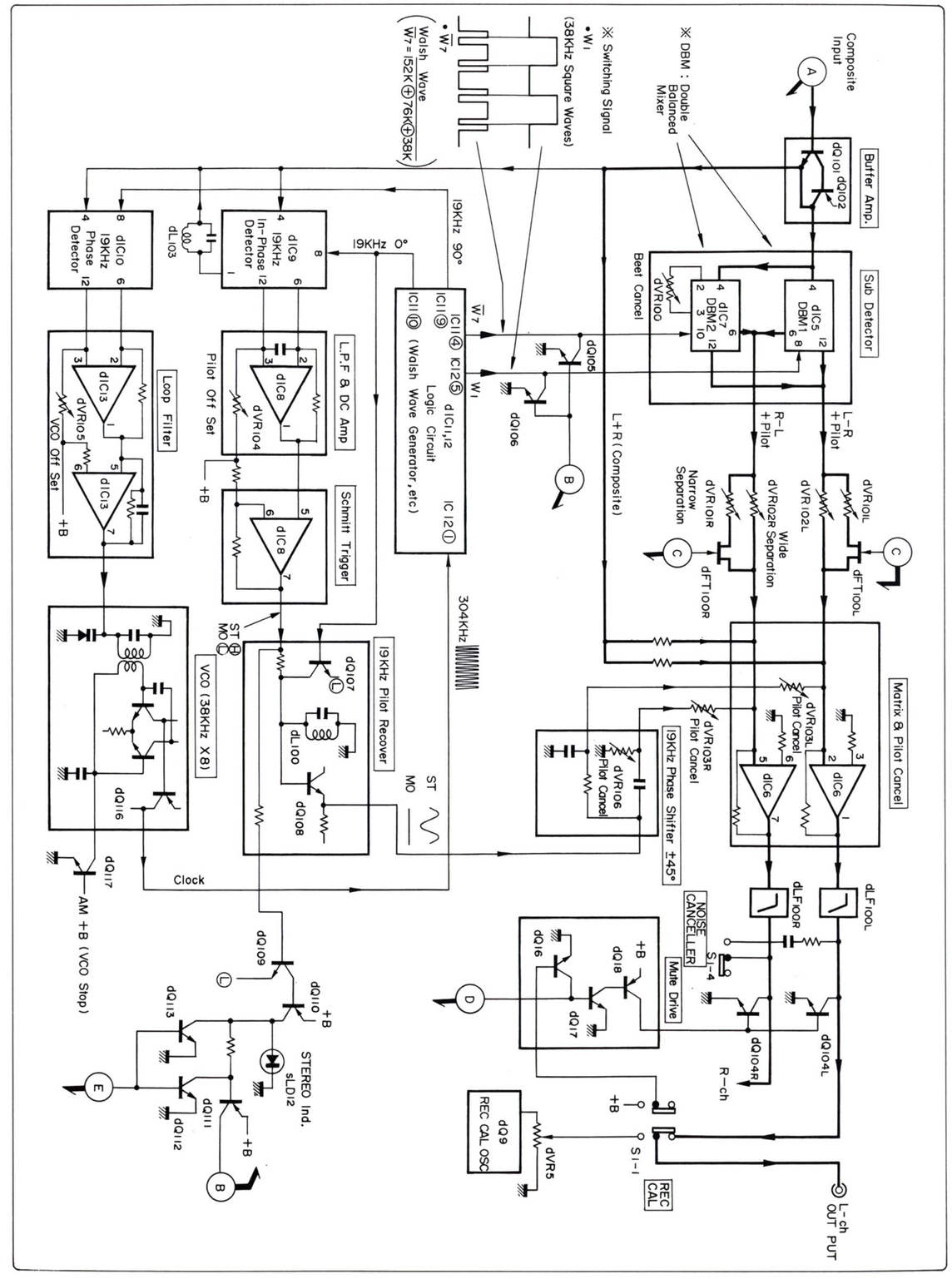

2. ADJUSTMENTS

2-1. FM Adjustment (See Top View on Page 9 and Parts Location of F-4372 on Page 6)

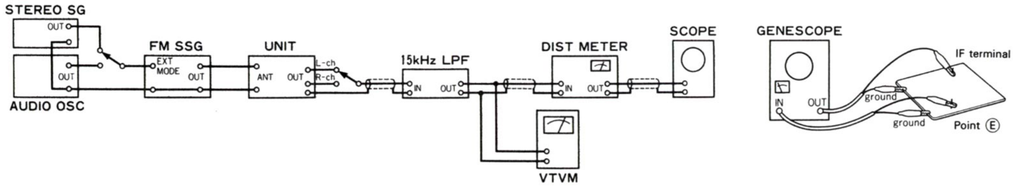

1) FM IF & Reference Frequency Adjustment

Note: 1. SELECTOR ..... FM
2. FM MODE ..... MONO
3. IF BAND ..... WIDE
4. RF MODE ..... DX

STEP	SUBJECT		FEED SIGNAL FROM	FEED SIGNAL TO	MEASURE OUTPUT	ADJUST	ADJUST FOR	REMARKS
1.	Reference Frequency Adj.		No Input	—	Between Point Ⓐ (Pin 24 of fIC1) & Earth Freq. Counter	fTC1 (F-4372)	25 kHz	• Short between Point Ⓑ & Point Ⓒ (Pin 36 & 42 of fIC1)
2.	IF Coil Adj.		98MHz ANT Input 20dBf (14.8dB), 1kHz (100% MOD.), FM SSG	ANT termianl 300Ω	Between Point Ⓓ (Pin 13 of dIC3) & Earth DC Volt Meter	IFT Coil (Front-end) & dT1 (F-4372)	Max. DC Volt	
	IF Wide Gain Adj.		Same as above	Same as above	Same as above	—	Read the indication on DC Volt Meter.	IF Band .... NARROW
						dVR2 (F-4372)	Equal DC Volts of wide band and narrow band.	IF BAND ..... WIDE
3.	Discriminator Coil Adj. In case of using Genescope	1	No Input	—	Between TP1 & TP2 (Accross dR34, F-4372) DC Volt Meter	dT2 ⓐ (F-4372)	DC 0V±30mV	• Repeat procedures as stated in subject 1 & 2. 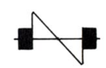
		2	Output 50dB, Genescope	IF Terminal (Front-end) & Earth	Between Point Ⓔ (dC27) & Earth	dT2 ⓑ (F-4372)	Steep linearity of S curve. Make symmetrical S curve.	
	Discriminator Coil Adj. In case of using Dist meter	1	No Input	—	Between TP1 & TP2 (Accross dR34, F-4372) DC Volt Meter	dT2 ⓐ (F-4372)	DC 0V±30mV	• Repeat procedures as stated in subject 1 & 2.
		2	98MHz ANT Input 65dBf (59.8dB), 1kHz (100% MOD.), FM SSG	ANT terminal 300Ω	OUTPUT L-CH or R-CH VTVM & SCOPE	dT2 ⓑ (F-4372)	Min. THD	
4.	LOCKED Level Adj.		98MHz ANT Input 35dBf (29.8dB), 1kHz (100% MOD.), FM SSG	Same as above	• LOCKED LED	dVR4 (F-4372)	6 indicator LED light up.	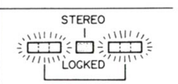

• Technical Hint for FM adjustment

There are two kind in indication of FM SSG output attenuator
1. Attenuator with marking of 75Ω open ..... open indication type.
2. Attenuator with marking of 75Ω load or close ..... load or close indication type.

FM SG output level in this FM adjustment are described as open indication type.
To feed FM signal, a dummy antenna circuit as Fig. 2-1 must be connected between FM SG output and ANT terminal (300Ω) of the unit.

Fig. 2-1

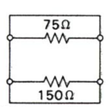

Dummy antenna

- The following table shows relations among FM SG attenuator indication (dB), available power ratio (dBf) and antenna terminal voltage (dB/μV) in each indication type.

	FM SG Attenuator Indication	Available Power Ratio	Antenna Terminal Voltage
Open indication type	0 dB 66 dB	−0.8 dBf 65.2 dBf	−6 dB/μV 60 dB/μV
Load or close indication type	0 dB 60 dB	5.2 dBf 65.2 dBf	0 dB/μV 60 dB/μV

2) REC Calibration level Adjustment

STEP	SUBJECT	FEED SIGNAL FROM	FEED SIGNAL TO	MEASURE OUTPUT	ADJUST	ADJUST FOR	REMARKS
1.	Calibration Level Adj.	98MHz ANT Input 65dBf (59.8dB), MONO 1kHz (100% MOD.)	ANT terminal 300Ω	OUT PUT R or L-CH VTVM & SCOPE	—	Read the indication on VTVM.	REC CAL SW.... OFF
		—	—	Same as above	dVR5 (F-4372)	−4dB from the above reading.	REC CAL SW .... ON

3) FM STEREO Adjustment (See Top View on Page 9 & Parts Location F-4375 on Page 7)

Note: 1. FM Mode ..... STEREO

STEP	SUBJECT		FEED SIGNAL FROM	FEED SIGNAL TO	MEASURE OUTPUT	ADJUST	ADJUST FOR	REMARKS
1.	PLL VCO Free Running Frequency Adj.	1	98MHz ANT Input 65dBf (59.8dB) FM SSG. No. MOD.	ANT terminal 300Ω	Between dTP1 & dTP4 (F-4375) DC Volt Meter	dVR105 (F-4375)	DC 0V±0.05V	
		2	Same as above	Same as above	Between dTP3 & Earth (F-4375) Frequency Counter	dL101 (F-4375)	304.000kHz	
2.	Pilot Offset Adj.	1	Same as above	Same as above	Between dTP2 & dTP5 (near dVR104) (F-4375) DC Volt Meter	dVR104 (F-4375)	DC 0V±0.1V	
		2	98MHz ANT Input 65dBf (59.8dB), FM SSG. Pilot 19kHz (9% MOD.), STEREO SG.	Same as above	STEREO Indicator	—	Confirm that STEREO Indicator light up.	
3.	19kHz Phase Coil Adj. In case of using dual channel oscilloscope		98MHz ANT Input 65dBf (59.8dB), FM SSG. 1kHz Sub channels (100% MOD.) STEREO SG.	Same as above	Between Point Ⓕ (R113) & Earth (F-4375) CH1 of Dual channel oscilloscope Between cross-conductor (JW8) & Earth (F-4375) CH2 of Dual channel oscilloscope	dL103 (F-4375)	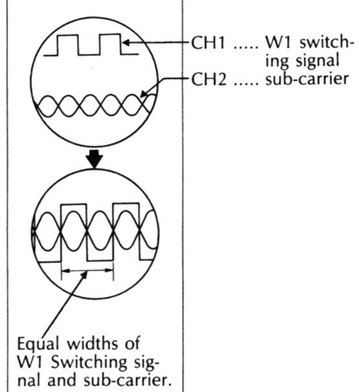	
	19kHz Phase Coil Adj. In case of using VTVM		98MHz ANT Input 65 dBf (59.8dB), FM SSG, Pilot 19kHz (9% MOD.), R MODE 10kHz+Pilot (100% MOD.), STEREO SG.	Same as above	OUTPUT L-ch VTVM & SCOPE	dL103 (F-4375)	Min. Indication on VTVM.	

STEP	SUBJECT		FEED SIGNAL FROM	FEED SIGNAL TO	MEASURE OUTPUT	ADJUST	ADJUST FOR	REMARKS
4.	Birdie Noise Cancelling Adj.		98MHz ANT Input 65dBf (59.8dB), FM SSG. Pilot 19kHz (9% MOD.) STEREO SG.	ANT terminal 300Ω	OUT PUT VTVM & SCOPE	dVR100 (F-4375)	Min. beat noise level	Birdie Noise is generated by interference from modurated side band of alternate station.
			115kHz 7~8V, Audio SG.	Between Point Ⓖ (dR102) through 47kohms resistor & Earth				
5.	Pilot Cancelling Adj.	1	98MHz ANT Input 65 dBf (59.8dB), FM SSG.	ANT terminal 300Ω	Between dTP5 (near dIC6) & Earth SCOPE	dVR104 (F-4375)	Min. 19kHz signal level	Pilot 19kHz ..... No Modulation
		2	98MHz ANT Input 65dBf (59.8dB), FM SSG. Pilot 19kHz (9% MOD.), STEREO SG.	Same as above	Same as above	—	Confirm that 19kHz pilot signal indicated on scope.	
		3	Same as above	Same as above	Between Point Ⓗ (dR146L) & Earth Audio Spectrum Analizer or Scope through 19kHz band pass filter (B.P.F.)	dL100 dVR103L (F-4375)	Min. 19kHz Pilot signal level	
		4	Same as above	Same as above	Between Point Ⓘ (dR146R) & Earth Audio Spectrum Analizer or Scope through 19kHz band pass filter (B.P.F.)	dVR103R dVR106 (F-4375)	Same as above	
6.	Separation Adj. (WIDE band)	1	98MHz ANT Input 65dBf (59.8dB), FM SSG. Pilot 19kHz (9% MOD.) R MODE 1kHz+Pilot (100% MOD.), STEREO SG.	Same as above	OUTPUT R-CH VTVM & SCOPE	—	Read the indication on VTVM.	IF BAND ..... WIDE Confirm R→L-CH
					OUTPUT L-CH VTVM & SCOPE	dVR102L (F-4375)	—34dB from the indication above.	
		2	98MHz ANT Input 65dBf (59.8dB), FM SSG. Pilot 19kHz (9% MOD.), L MODE 1kHz+Pilot (100% MOD.), STEREO SG.	Same as above	OUTPUT L-CH VTVM & SCOPE	—	Read the indication on VTVM	IF BAND ..... WIDE Confrim L→R-CH
					OUTPUT R-CH VTVM & SCOPE	dVR102R (F-4375)	—34dB from the indication above.	After this adjustment, perform STEP4. Birdie Noise Cancelling Adj.
7.	Separation Adj. (NARROW band)	1	98MHz ANT Input 65dBf (59.8dB), FM SSG. Pilot 19kHz (9% MOD.) R MODE 1kHz+Pilot (100% MOD.), STEREO SG.	Same as above	OUTPUT R-CH VTVM & SCOPE	—	Read the indication on VTVM	IF BAND ..... NARROW Confirm R→L-CH
					OUTPUT L-CH VTVM & SCOPE	dVR101L (F-4375)	—34dB from the indication above.	
		2	98MHz ANT Input 65dBf (59.8dB), FM SSG. Pilot 19kHz (9% MOD.), L MODE 1kHz+Pilot (100% MOD.) STEREO SG.	Same as above	OUTPUT L-CH VTVM & SCOPE	—	Read the indication on VTVM	IF BAND ..... NARROW Confirm L→R-CH
					OUTPUT R-CH VTVM & SCOPE	dVR101R (F-4375)	—34dB from the indication above.	After this adjustment, perform STEP4. Birdie Noise Cancelling Adj.
8.	Muting Level Adj.		98MHz ANT Input 25dBf (19.8dB), FM SSG, Pilot 19kHz (9% MOD.), L or R MODE 1kHz+Pilot (100% MOD.). STEREO SG.	Same as above	Stereo indicator OUTPUT L-CH or R-CH, VTVM & SCOPE	dVR3 (F-4372)	Stereo indicator turns ON or Output Signal comes out	
9.	Auto Stop Level Adj.		98MHz ANT Input 35dBf (29.8dB)~ 40dBf (34.8dB) 1kHz (100% MOD.), FM SSG	Same as above	Digital Display	dVR1 (F-4372)	Turn the tuner to 98MHz by using the automatic search tuning operation.	• Perform the automatic search tuning operation by depressing the TUNING button.

www.hifiengine.com

2-2. AM Adjustment (See Top View on Page 9 and Parts Location of F-4372 on Page 6)

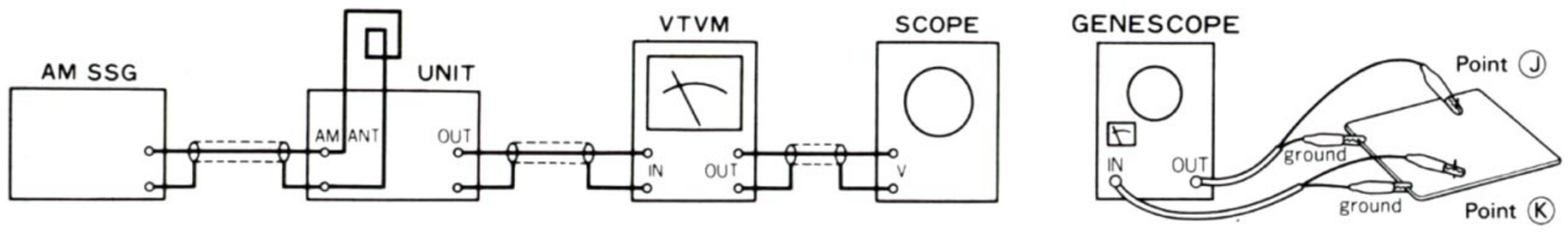

Note: 1. SELECTOR..... AM
2. Connect AM loop antenna to AM antenna terminal

STEP	SUBJECT	FEED SIGNAL		MEASURE OUTPUT	ADJUST	ADJUST FOR	REMARKS
		FROM	TO				
1.	IF Coil Adj.	Genescope Output 60dB	Point Ⓙ (eC8) (F-4372)	Between Point Ⓚ (eR19) & Earth F-4372	eT3 (F-4372)	Max, Waveform	
2.	520kHz (or 522kHz) Tuning Voltage Adj.	No Input	—	Between Point Ⓛ (eR1, F-4372) & Earth DC Volt Meter	eT1 (F-4372)	1.1V ± 0.2V	• Repeat procedures as stated in subject 2 & 3.
3.	1610kHz (or 1611kHz) Tuning Voltage Adj.	No Input	—	Same as above	eTC1 (F-4372)	19.7V ± 0.2V	
4.	600kHz (or 603kHz) RF Adj.	600kHz (or 603kHz) ANT Input 30dB 400Hz (30% MOD.), AM SSG	ANT terminal	OUTPUT L-CH or R-CH VTVM & SCOPE	eT2 (F-4372)	Max. Output	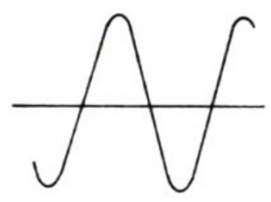
5.	1400kHz (or 1404kHz) RF Adj.	1400kHz (or 1404kHz) ANT Input 30dB 400Hz (30% MOD.), AM SSG	Same as above	OUTPUT L-CH or R-CH VTVM & SCOPE	eTC2 (F-4372)	Max. Output	
6.	LOCKED Level Adj.	1000kHz (or 999kHz) ANT Input 50dB 400Hz (30% MOD.), AM SSG	Same as above	LOCKED LED	eVR2 (F-4372)	6 Indicator LED light up.	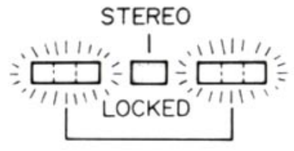
7.	Auto Stop Level Adj.	1000kHz (or 999kHz) ANT Input 65dB 400Hz (30% MOD.), AM SSG	Same as above	Between Point Ⓜ (jW2 F-4372) & Earth DC Volt Meter	eVR1 (F-4372)	1.1V ± 0.1V	

www.hifiengine.com

3. PARTS LOCATION & PARTS LIST

3-1. F-4372 FM, AM Tuner & Synthesizer Control Circuit Board (Stock No. 00759901)

Component Side

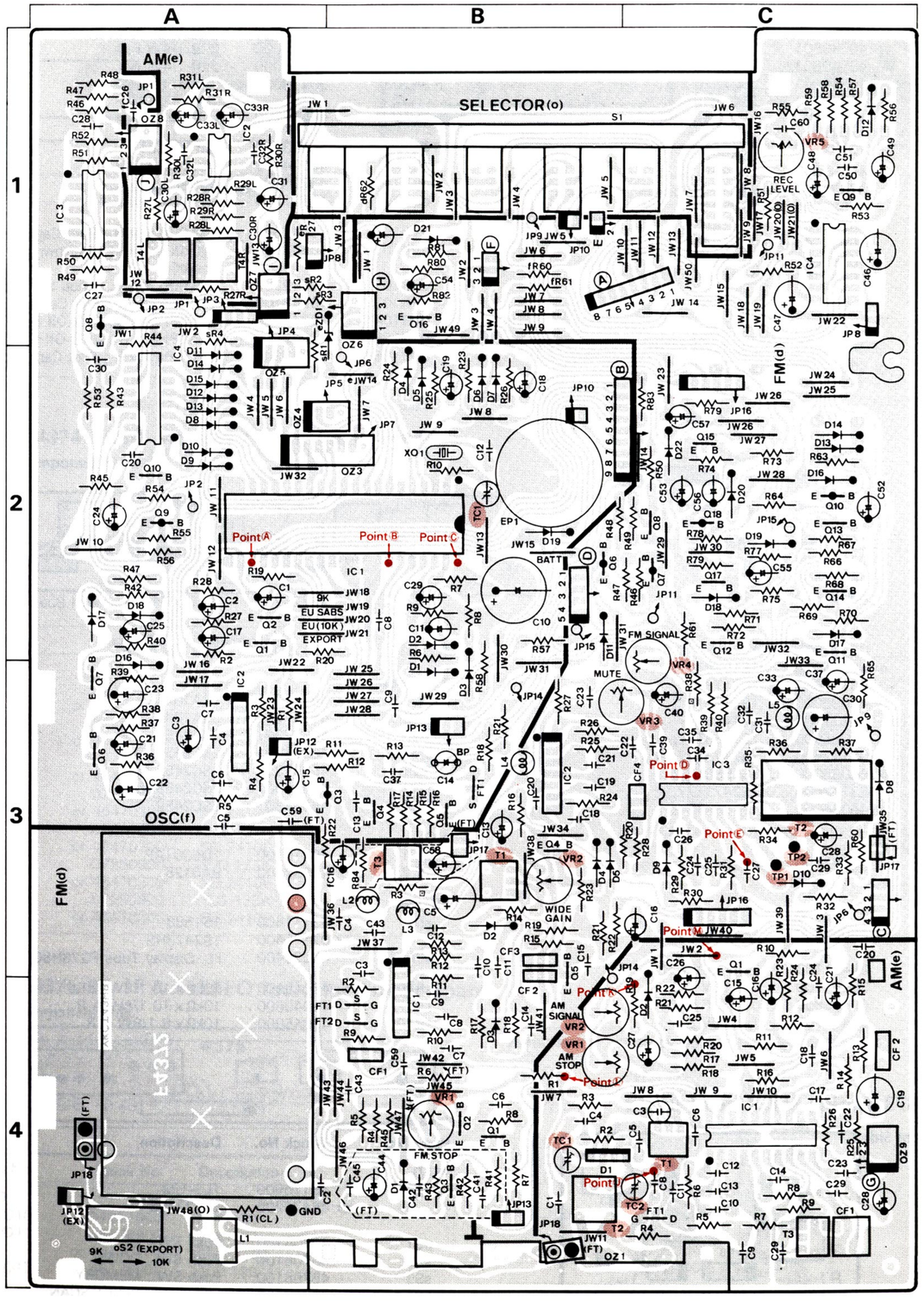

Parts List (F-4372)

Parts No.	Stock No.	Description
	46725000	FM Frontend Pack
•Transistor		
dQ1	46391901	2SC2785
dQ2	46391901	2SC2785
dQ6	46367001	2SA1115
dQ7	46367001	2SA1115
dQ8	46367101	2SC2603
dQ9	46391901	2SC2785
dQ10	46392001	2SA1175
dQ11	46391901	2SC2785
dQ12	46391901	2SC2785
dQ13	46391901	2SC2785
dQ14	46391901	2SC2785
dQ15	46391901	2SC2785
dQ16	46391901	2SC2785
dQ17	46391901	2SC2785
dQ18	46392001	2SA1175
•FET		
dFT1	46724700	2SK241-Y
	or 46724701	2SK241-GR
dFT2	46724700	2SK241-Y
	or 46724701	2SK241-GR
•IC		
dIC1	03605400	μPC1163H
dIC2	03605400	μPC1163H
dIC3	46725900	HA12412-01
•Diode		
dD1	03117600	1S2473T77
	or 46086000	1S1588TP-3
dD2	03117600	1S2473T77
	or 46086000	1S1588TP-3
dD3	03117600	1S2473T77
	or 46086000	1S1588TP-3
dD4	03117600	1S2473T77
	or 46086000	1S1588TP-3
dD5	03117600	1S2473T77
	or 46086000	1S1588TP-3
dD8	03117600	1S2473T77
	or 46086000	1S1588TP-3
dD9	03117600	1S2473T77
	or 46086000	1S1588TP-3
dD10	03117600	1S2473T77
	or 46086000	1S1588TP-3
dD11	03117600	1S2473T77
	or 46086000	1S1588TP-3
dD12	03117600	1S2473T77
	or 46086000	1S1588TP-3
dD13	03117600	1S2473T77
	or 46086000	1S1588TP-3
dD14	03117600	1S2473T77
	or 46086000	1S1588TP-3
dD16	03117600	1S2473T77
	or 46086000	1S1588TP-3
dD17	03117600	1S2473T77
	or 46086000	1S1588TP-3
dD18	03117600	1S2473T77
	or 46086000	1S1588TP-3
dD19	03117600	1S2473T77
	or 46086000	1S1588TP-3
dD20	03117600	1S2473T77
	or 46086000	1S1588TP-3
dD21	03117600	1S2473T77
	or 46086000	1S1588TP-3
dD22	03117600	1S2473T77
	or 46086000	1S1588TP-3
dCF1	09105100	Ceramic Filter (SFE10.7MXK-N)
dCF2	46867100	Ceramic FILTER (SFE10.7MM RED)
dCF3	46867100	Ceramic FILTER (SFE10.7MM RED)
dCF4	09105100	Ceramic Filter (SFE10.7MXK-N)
dL1	46548900	Balun
dL2	46174400	Inductor 3.3μH
dL3	46175300	Inductor 100μH
dL4	46174400	Inductor 3.3μH

Parts No.	Stock No.	Description
dL5	46174400	Inductor 3.3μH
dT1	46369500	FM IF Coil
dT2	46724600	FM IF Coil
dVR1	10351900	100kΩ(B) S.V.R., FM auto stop level adj.
dVR2	10350400	330Ω(B) S.V.R., IF wide gain adj.
dVR3	10351700	47kΩ(B) S.V.R., Muting level adj.
dVR4	10351300	10kΩ(B) S.V.R., FM Strenght signal level adj.
dVR5	10351900	100kΩ(B) S.V.R., Rec calibration
•Transistor		
eQ1	46367301	2SC2458
•FET		
eFT1	46393000	2SK192A-Y
	or 46393001	2SK192A-GR
•IC		
eIC1	07237200	LA1245
•Varistor		
eD1	07237300	KV-1226EF
•Diode		
eD2	03117600	1S2473T77
	or 46086000	1S1588TP-3
eTC1	46095600	Trimmer Capacitor 20pF
eTC2	46095600	Trimmer Capacitor 20pF
eCF1	46724500	Ceramic Filter
eCF2	46578100	Ceramic Filter
eT1	46724100	AM RF Coil
eT2	46724200	AM RF Coil
eT3	46724300	AM IF Coil
eVR1	10351700	47kΩ(B) S.V.R., AM stop level
eVR2	10351700	47kΩ(B) S.V.R., AM strength signal
•Transistor		
fQ1	46367301	2SC2458
fQ2	46367301	2SC2458
fQ3	46367201	2SA1048
fQ4	46367301	2SC2458
fQ5	46367301	2SC2458
fQ6	46367301	2SC2458
fQ7	46367301	2SC2458
fQ8	46367201	2SA1048
fQ9	46367201	2SA1048
fQ10	46367301	2SC2458
•FET		
fFT1	03703001	2SK117-Y
	or 03703002	2SK117-GR
•IC		
fIC1	46397400	TC9157P
fIC2	07225000	TD6104P
fIC3	03604100	TC4011P
fIC4	46530000	TC4022BP
•Diode		
fD1	03117600	1S2473T77
	or 46086000	1S1588TP-3
fD2	03117600	1S2473T77
	or 46086000	1S1588TP-3
fD3	03117600	1S2473T77
	or 46086000	1S1588TP-3
fD4	03117600	1S2473T77
	or 46086000	1S1588TP-3
fD5	03117600	1S2473T77
	or 46086000	1S1588TP-3

Parts No.	Stock No.	Description
fD6	03117600	1S2473T77
	or 46086000	1S1588TP-3
fD7	03117600	1S2473T77
	or 46086000	1S1588TP-3
fD8	03117600	1S2473T77
	or 46086000	1S1588TP-3
fD9	03117600	1S2473T77
	or 46086000	1S1588TP-3
fD10	03117600	1S2473T77
	or 46086000	1S1588TP-3
fD11	03117600	1S2473T77
	or 46086000	1S1588TP-3
fD12	03117600	1S2473T77
	or 46086000	1S1588TP-3
fD13	03117600	1S2473T77
	or 46086000	1S1588TP-3
fD14	03117600	1S2473T77
	or 46086000	1S1588TP-3
fD15	03117600	1S2473T77
	or 46086000	1S1588TP-3
fD16	03117600	1S2473T77
	or 46086000	1S1588TP-3
fD17	03117600	1S2473T77
	or 46086000	1S1588TP-3
fD18	03117600	1S2473T77
	or 46086000	1S1588TP-3
fD19	03117600	1S2473T77
	or 46086000	1S1588TP-3
fC10	46151500	2200μF 6.3V E.L.
fC14	08451700	1μF 50V E.B.
fTC1	46095800	Trimmer Capacitor 45pF
	or 46163000	Trimmer Capacitor 50pF
fEP1	46255500	LITHIUM BATTERY CR2430
oS1	46725300	Push SW., REC CAL, RF BAND, IF BAND, NOISE CANCELLER, FM MODE, TUNING
oS2	46177200	Slide SW., AM STEP (XX)

3-2. F-4375 MPX Circuit Board (Stock No. 00760201)

Component Side

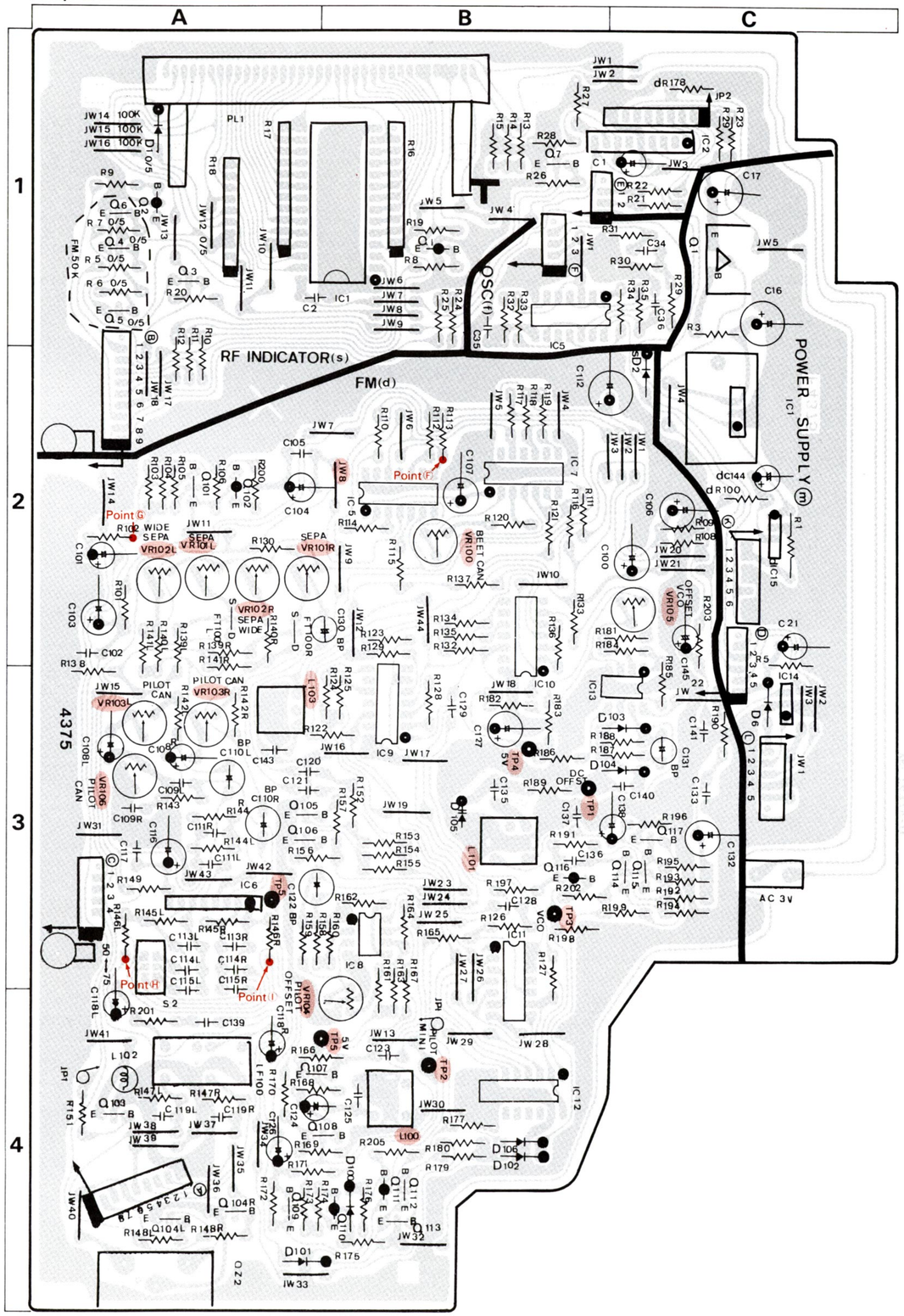

Parts List <F-4375>

Parts No.	Stock No.	Description
•Transistor		
dQ101	46581701	2SC1845
dQ102	46581601	2SA992
dQ103	46540801	2SC2878
dQ104	46540801	2SC2878
dQ105	46540801	2SC2878
dQ106	46540801	2SC2878
dQ107	46581701	2SC1845
dQ108	46581701	2SC1845
dQ109	46581701	2SC1845
dQ110	46581601	2SA992
dQ111	46581601	2SA992
dQ112	46581701	2SC1845
dQ113	46581701	2SC1845
dQ114	46581701	2SC1845
dQ115	46581701	2SC1845
dQ116	46581601	2SA992
dQ117	46581701	2SC1845
•FET		
dFT100	46643700	2SK246-Y
	or 46643701	2SK246-GR
	or 46643702	2SK246-BL
•IC		
dIC5	46723700	NJM1496D
dIC6	46579100	M5219L
dIC7	46723700	NJM1496D
dIC8	03607700	NJM4558D
dIC9	46723700	NJM1496D
dIC10	46723700	NJM1496D
dIC11	46465500	MSM4030RS
dIC12	03604400	MSM4520
dIC13	03607700	NJM4558D
⚠ dIC14	46359400	L78N05
⚠ dIC15	46361500	L78N12
•Diode		
dD100	03117600	1S2473T77
	or 46086000	1S1588TP-3
dD101	03117600	1S2473T77
	or 46086000	1S1588TP-3
dD102	03117600	1S2473T77
	or 46086000	1S1588TP-3
dD103	03117600	1S2473T77
	or 46086000	1S1588TP-3
dD104	03117600	1S2473T77
	or 46086000	1S1588TP-3
•Varactor Diode		
dD105	46087800	FCC66M
•Diode		
dD106	03117600	1S2473T77
	or 46086000	1S1588TP-3
dC110	08451100	22μF 16V E.B.
dC122	08451700	1μF 50V E.B.
dC125	46695600	0.015μF 50V F.C.
dC131	08451700	1μF 50V E.B.

Parts No.	Stock No.	Description
⚠ dR3	08922500	47Ω 1/2W N.I.R.
⚠ dR38	08922100	22Ω 1/2W N.I.R.
⚠ dR100	00118000	22Ω 1/4W F.R.
⚠ dR101	00118000	22Ω 1/4W F.R.
⚠ dR149	00118000	22Ω 1/4W F.R.
⚠ dR190	00118000	22Ω 1/4W F.R.
⚠ dR203	00118000	22Ω 1/4W F.R.
dLF100	46579200	Low Pass Filter
dL100	46723500	AM RF Coil
dL102	46174400	Inductor 3.3μH
dL101	46723400	AM RF Coil
dL103	42407201	FM MPX Coil
dVR100	10342300	2.2kΩ(B) S.V.R., Beet Cancel
dVR101	10343300	100kΩ(B) S.V.R., Narrow Sparation
dVR102	10342300	2.2kΩ(B) S.V.R., Wide Separation
dVR103	10343100	47kΩ(B) S.V.R., Pilot Cancel
dVR104	10342700	10kΩ(B) S.V.R., Pilot Off Set
dVR105	10342700	10kΩ(B) S.V.R., VCO Off Set
dVR106	10342300	2.2kΩ(B) S.V.R., Pilot Cancel
•IC		
fIC5	03604100	TC4011P
•Transistor		
⚠ mQ1	03083901	2SD313AL
•IC		
⚠ mIC1	46361600	L78N15
•Diode		
⚠ mD6	03117600	1S73T77
⚠	or 46086000	1S1588TP-3
	46725200	2P OUTPUT Terminal Board, OUT PUT
⚠ mR1	00179000	10Ω 1W N.I.R.
•Transistor		
sQ1	46367201	2SA1048
sQ2	46367201	2SA1048
sQ3	46367301	2SC2458
sQ4	46367301	2SC2458 (EU)
sQ5	46367301	2SC2458 (EU)
sQ6	46367301	2SC2458 (EU)
sQ7	46367301	2SC2458
•IC		
sIC1	46410100	TD6301AP
sIC2	46392500	BA6125
•Diode		
sD2	03111800	1S1588
	or 07176400	1S2473HS
sPL1	46526400	FL. Display Tube FG78H8GR
sR16	46049600	10kΩ×10 1/8W A.R.
sR17	46049600	10kΩ×10 1/8W A.R.
sR18	46045900	10kΩ×8 1/8W A.R.

3-3. F-4373 Tuning SW. Circuit Board

Component Side

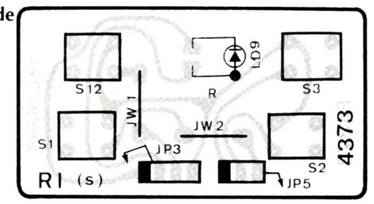

Parts List

Parts No.	Stock No.	Description
•LED		
sLD9	46176900	TLS-123
	or 46470200	SEL2210S
sS1	46708100	Push SW., UP
sS2	46708100	Push SW., DOWN
sS3	46708100	Push SW., MEMORY
sS12	46708100	Push SW., RESET SCAN

3-4. F-4377 Power Supply Circuit Board (Stock No. 00760401)

Component Side

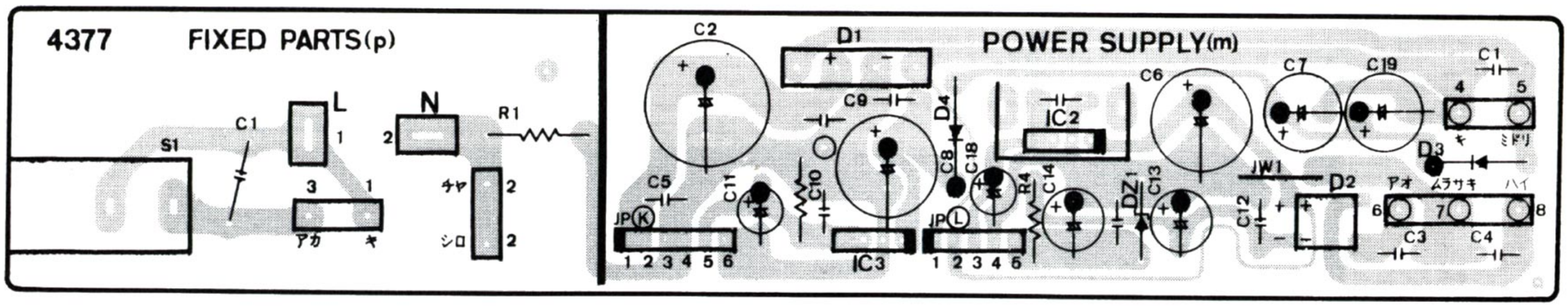

Parts List

Parts No.	Stock No.	Description
•IC		
⚠ mIC2	46361200	L78N06
⚠ mIC3	46361800	L78N24
•Diode		
⚠ mD1	07193300	UB-152LFF
⚠ mD2	46273600	DBB10-B
⚠ mD3	03117700	10E-2
⚠ mD4	03117700	10E-2

Parts No.	Stock No.	Description
•Zener Diode		
mDZ1	46101500	05Z 6.2-X
	or 46101600	05Z 6.2-Y
	or 46101700	05Z 6.2-Z
mC5	46280900	0.22μF 50V F.C.
⚠ pC1	46425800	0.01μF 400V C.C.
⚠ pS1	46360300	Push SW., POWER

3-5. F-4374 Preset Memory Circuit Board

Component Side

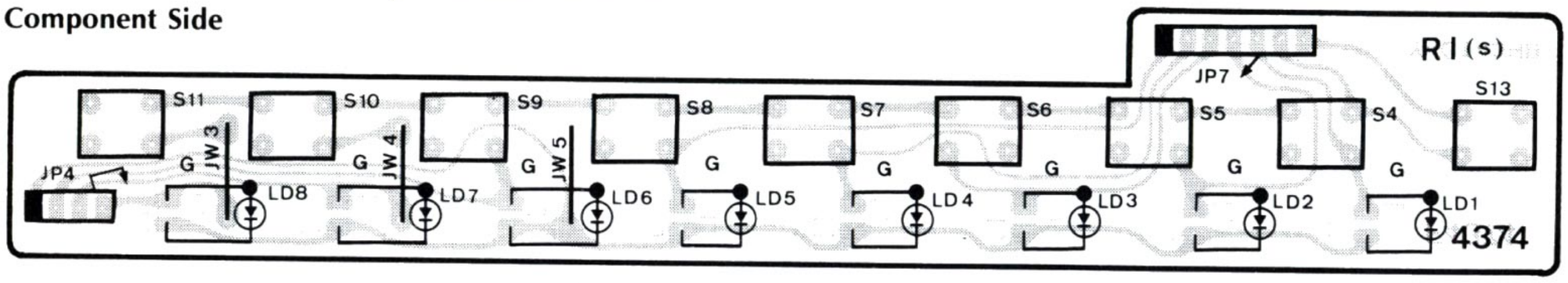

Parts List

Parts No.	Stock No.	Description
•LED		
sLD1	07250900	TLG-123A
	or 46470300	SEL2410E
sLD2	07250900	TLG-123A
	or 46470300	SEL2410E
sLD3	07250900	TLG-123A
	or 46470300	SEL2410E
sLD4	07250900	TLG-123A
	or 46470300	SEL2410E
sLD5	07250900	TLG-123A
	or 46470300	SEL2410E
sLD6	07250900	TLG-123A
	or 46470300	SEL2410E
sLD7	07250900	TLG-123A
	or 46470300	SEL2410E

Parts No.	Stock No.	Description
sLD8	07250900	TLG-123A
	or 46470300	SEL2410E
sS4	46708100	Push SW., PRESET STATION 1
sS5	46708100	Push SW., PRESET STATION 2
sS6	46708100	Push SW., PRESET STATION 3
sS7	46708100	Push SW., PRESET STATION 4
sS8	46708100	Push SW., PRESET STATION 5
sS9	46708100	Push SW., PRESET STATION 6
sS10	46708100	Push SW., PRESET STATION 7
sS11	46708100	Push SW., PRESET STATION 8
sS13	46708100	Push SW., FM/AM

3-6. F-4376 RF, IF & STEREO Indicator Circuit Board

Component Side

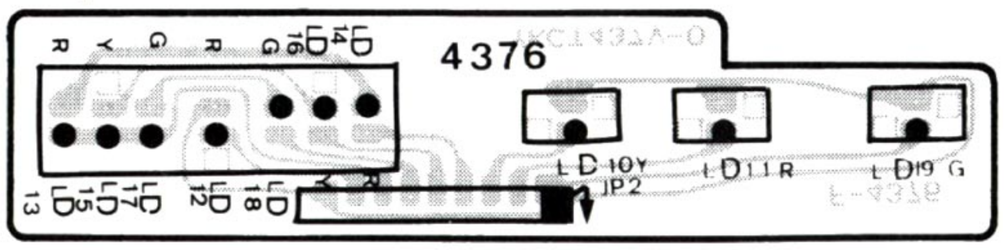

Parts List

Parts No.	Stock No.	Description
•LED		
sLD10	07251000	TLY-123
sLD11	46176900	TLS-123
	or 46470200	SEL2210S
sLD12	46176900	TLS-123
	or 46470200	SEL2210S

Parts No.	Stock No.	Description
sLD13	46176900	TLS-123
	or 46470200	SEL2210S
sLD14	46176900	TLS123
	or 46470200	SEL2210S
sLD15	07251000	TLY-123
sLD16	07251000	TLY-123
sLD17	07250900	TLG-123A
	or 46470300	SEL2410E
sLD18	07250900	TLG-123A
	or 46470300	SEL2410E
sLD19	07250900	TLG-123A
	or 46470300	SEL2410E

www.hifiengine.com

4. OTHER PARTS

4-1. Front View

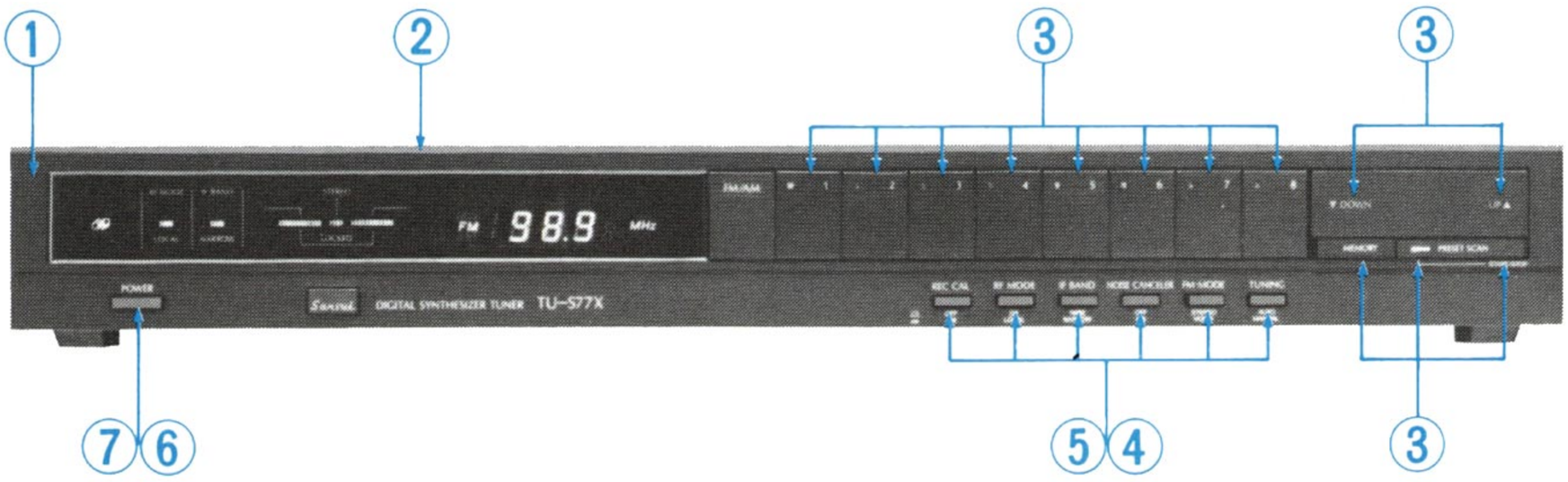

4-2. Top View

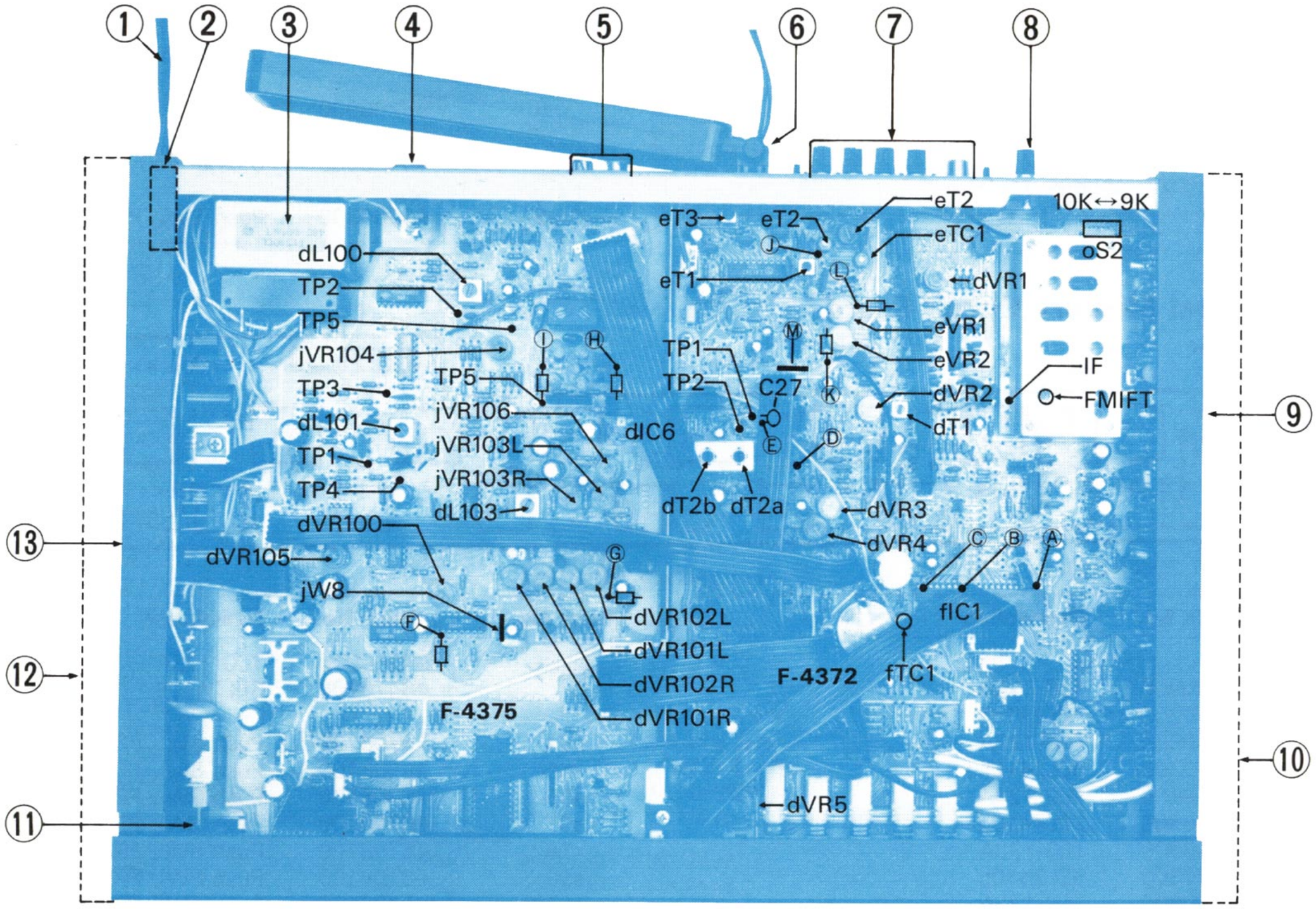

Parts List <Front View>

Parts No.	Stock No.	Description
1	47326000	Front Panel Ass'y
2	47301000	Bonnet
3	46708100	Push SW., FM/AM, MEMORY, DOWN, UP, PRESET STATION, PRESET SCAN
4	47300300	Knob, REC CAL, RF MODE, IF BAND, TUNING, FM MODE, NOISE CANCELLER
5	46725300	Push SW., REC CAL, RF MODE, IF BAND, TUNING, FM MODE, NOISE CANCELLER
6	47324600	Knob, POWER
⚠ 7	46360300	Push SW., POWER

Parts List <Top View>

Parts No.	Stock No.	Description
⚠ 1	38004700	Power Supply Cord (XX, UL, CSA)
⚠	38004500	Power Supply Cord (EU)
2	47168600	AC Cord Cover
⚠ 3	15013801	Power Transformer (XX)
⚠	15013802	Power Transformer (UL, CSA)
⚠	15013805	Power Transformer (EU)
⚠ 4	46364900	AC OUTLET (XX, UL, CSA)
⚠	07204700	Voltage Selector, (220V/240V) (EU)
5	46725200	2P OUTPUT Terminal
6	07193200	Antenna Holder
7	46725100	Antenna Terminal
8	22301510	Ground Terminal
9	47326600	Side Panel R Ass'y
10	47337700	Wood Side Panel R Ass'y (TU-S77XW Only)
11	47300400	Joint Shaft
12	47337600	Wood Side Panel L Ass'y (TU-S77XW Only)
13	47326400	Side Panel L Ass'y

www.hifiengine.com

5. SCHEMATIC DIAGRAM 5-1. RF, IF & Control Section

*Design and specifications subject to change without notice for improvement.
*La presention et les specifications sont susceptibles d'être modifiees sans preavis par suites d'améliorations éventuelles.
*Anderungen, die dem technischen Fortschritt dienen, bleiben vorbehalten.

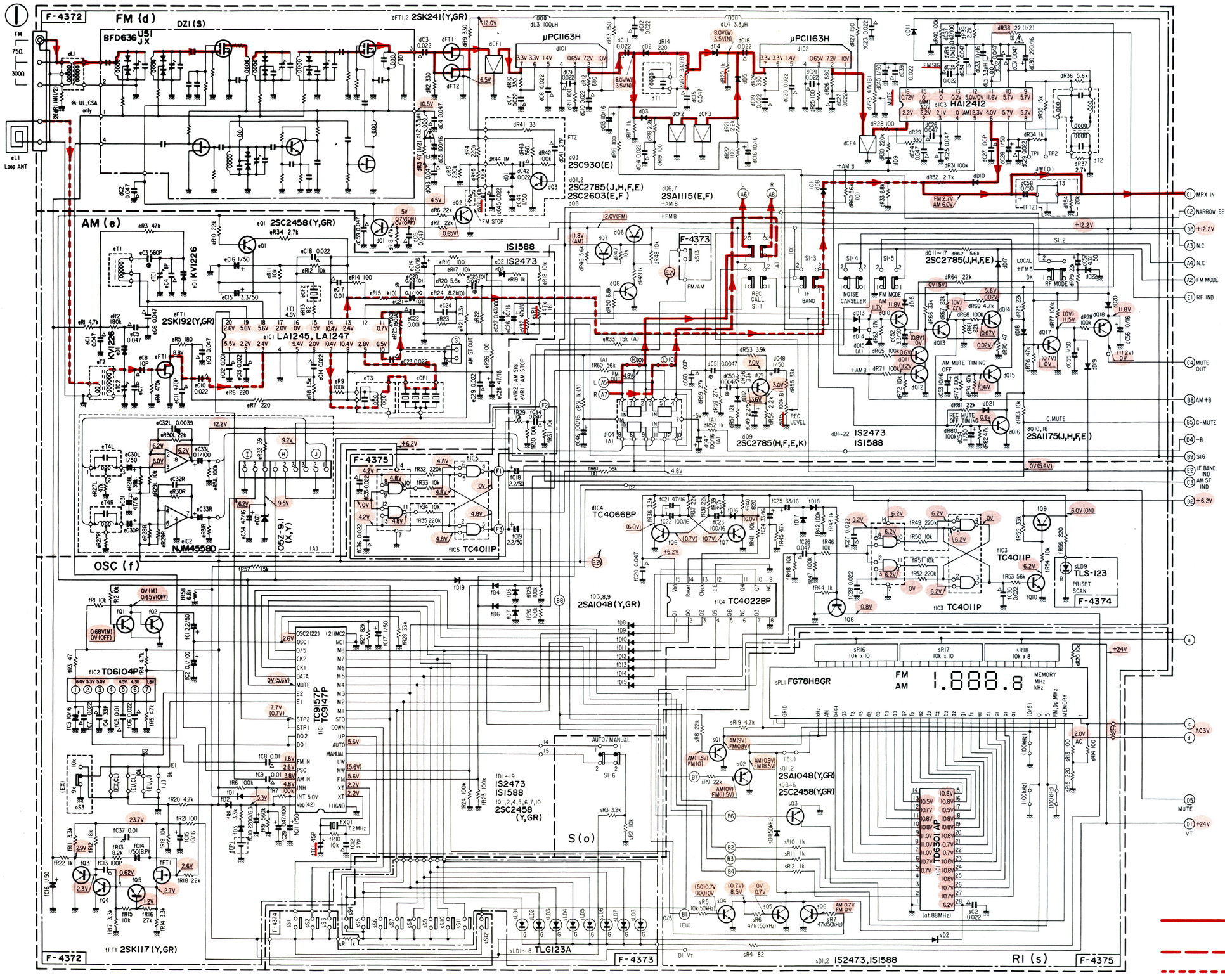

SYMBOL OF FUNCTION
(d) FM
(e) AM
(f) OSC CONTROL
(o) SELECTOR
(s) RF INDICATOR

SWITCHES
SI-1 : REC CALL — 1. OFF, 2. ON
SI-2 : RF MODE — 1. OFF, 2. ON
SI-3 : IF BAND — 1. WIDE, 2. NARROW
SI-4 : NOISE CANSELER — 1. OFF, 2. ON
SI-5 : FM MODE — 1. STEREO/MUTE ON, 2. MONO/MUTE OFF
SI-6 : TUNING — 1. AUTO, 2. MANUAL
sS1 : UP
sS2 : DOWN
sS3 : MEMORY
sS4~11 : STATION 1~8
sS12 : PRESET SCAN
TUNING

CAPACITORS
△ Ceramic
⊗ Polystyrene
◉ Film (Mylar)
BP Bi-Polar Electrolytic
Are in μF, Unless otherwise Noted. P: pF

RESISTORS
⊡ Non-Inflammable Type
Are in ohms, 1/4 Watts, ±5% Tolerance
Unless otherwise Noted. k: kΩ, M: MΩ

Each D.C. Voltage shows the nominal Value in Volts at no input signal

The Voltage parenthesized indicates the Voltage in Stereo Signal reception

(O) : TU-S77X, TU-S607G
(A) : TU-S77MX

5-2. MPX Section

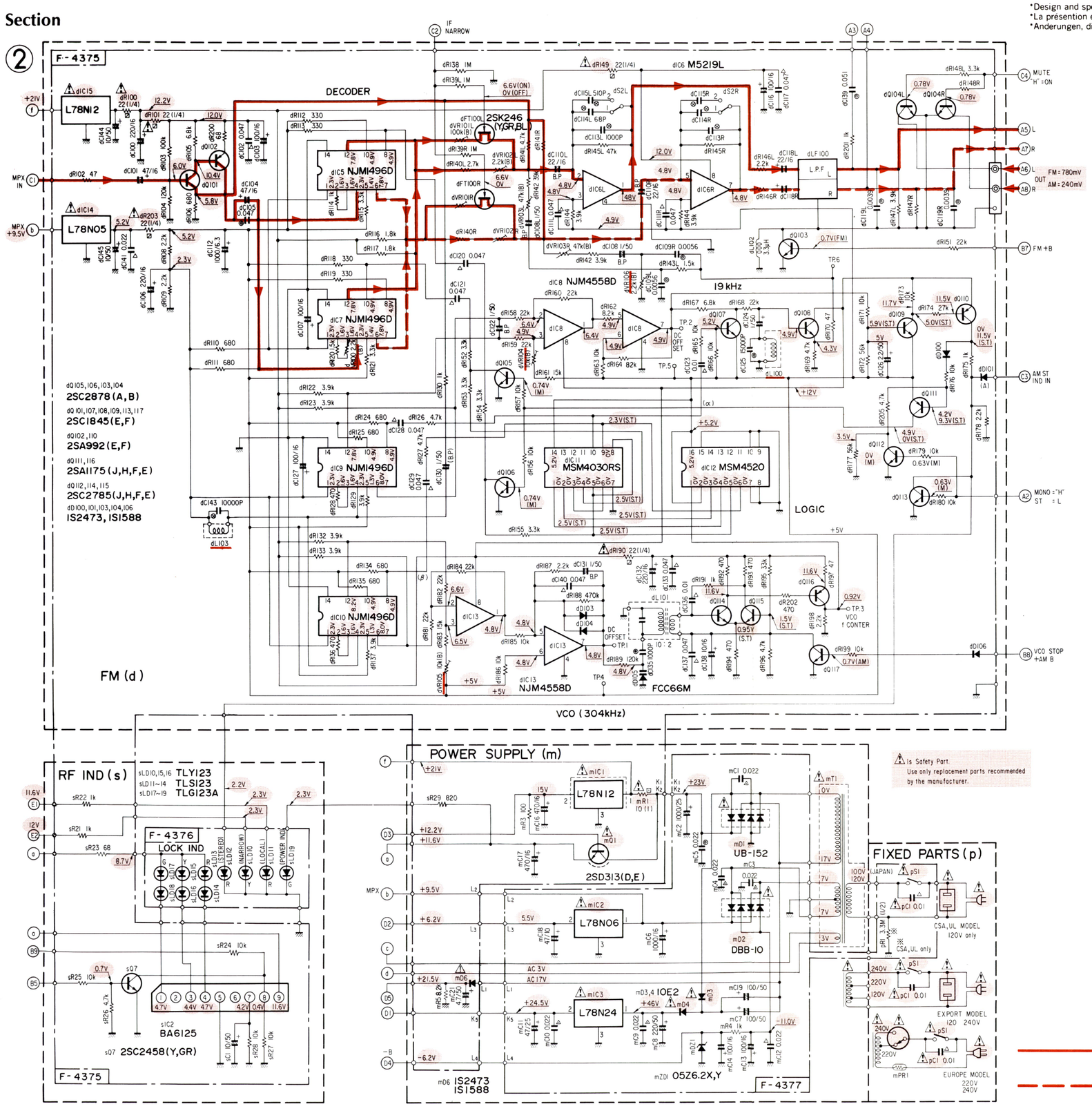

*Design and specifications subject to change without notice for improvement.
*La presention et les spécifications sont susceptibles d'être modifiées sans préavis par suites d'améliorations éventuelles.
*Änderungen, die dem technischen Fortschritt dienen, bleiben vorbehalten.

SWITCH & Adjust

dS2(L,R)	FM de-enfacess	1 50μs 2 75μs
pS1	POWER SW	ON, OFF
dVR100	Birdy Beat CANCEL Adjust	
dVR101L,R	NARROW, SEPA Adjust	
dVR102L,R	WIDE, SEPA Adjust	
dVR103L,R	19kHz Pilot CANCEL Adjust	
dVR106		
dVR104	19kHz DC Amp DC OFFSET Adjust	
dVR105	VCO L·P Amp DC OFFSET Adjust	

CAPACITORS
Are in μF, Unless otherwise Noted. P: pF
⚠ Barrier Layer
△ Ceramic
⊗ Polystyrene
◎ Film (Mylar)
◉ Metalized Paper
B.P Bi-Poler Electrolytic

RESISTORS
Are in ohms, 1/4 Watts, ± 5% Tolerance
Unless otherwise Noted. k: kΩ, M: MΩ

⚠ Fusing type
⚠ Non-Inflammable type

Each DC Voltage shows the nominal Value in Volts at no input signal

The voltage parenthesized indicates the voltage is stereo signal reception

(O): TU-S77X, TU-S607G
(A): TU-S77AMX

⚠ is Safety Part.
Use only replacement parts recommended by the manufacturer.

Compsit, Sub Channel & L-ch Signal Line

Sub Channel & R-ch Signal Line

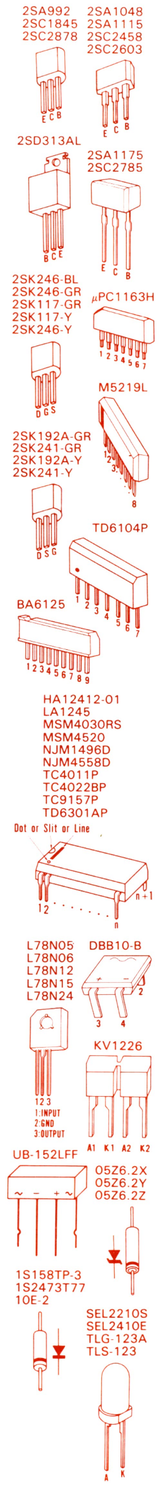

6. INTERIOR BLOCK DIAGRAM OF IC

•MSM4520 (Dual Binary Up Counter IC)

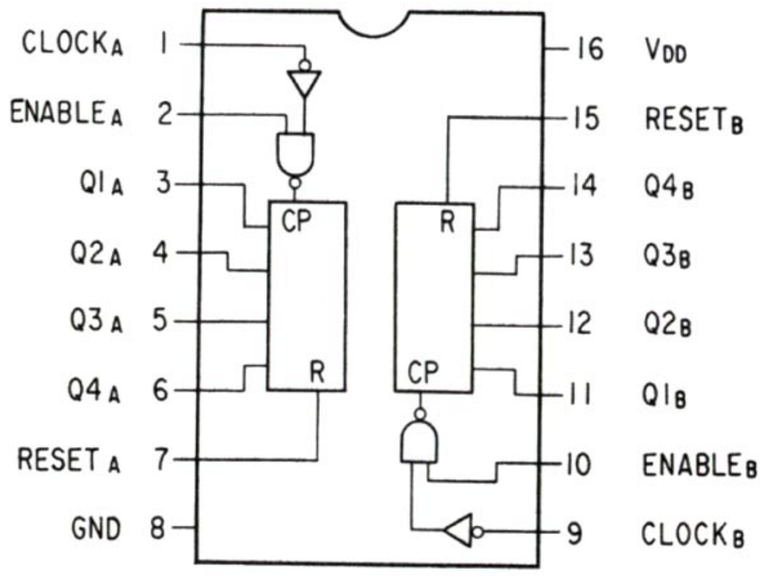

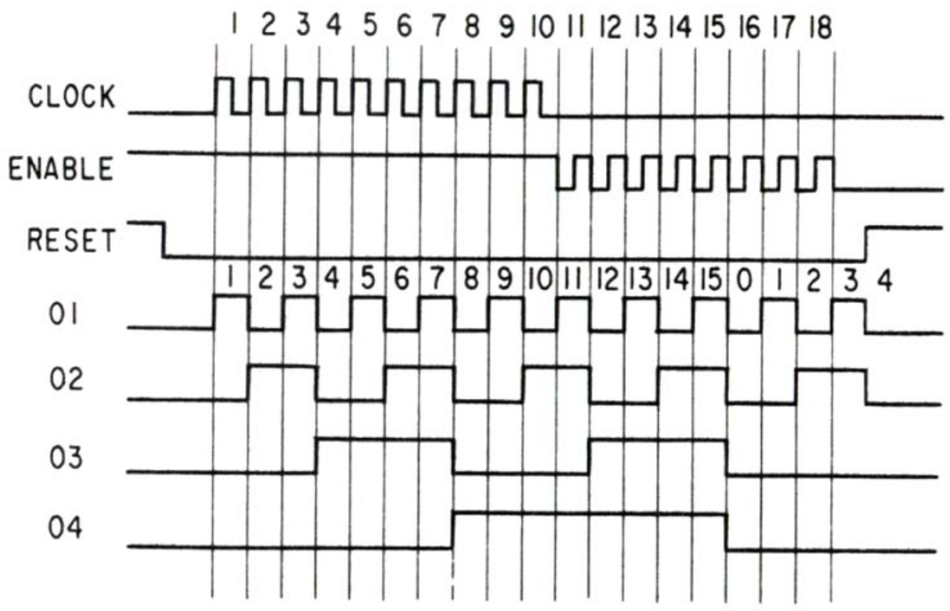

•NJM1496 (Double Balanced Amp. IC)

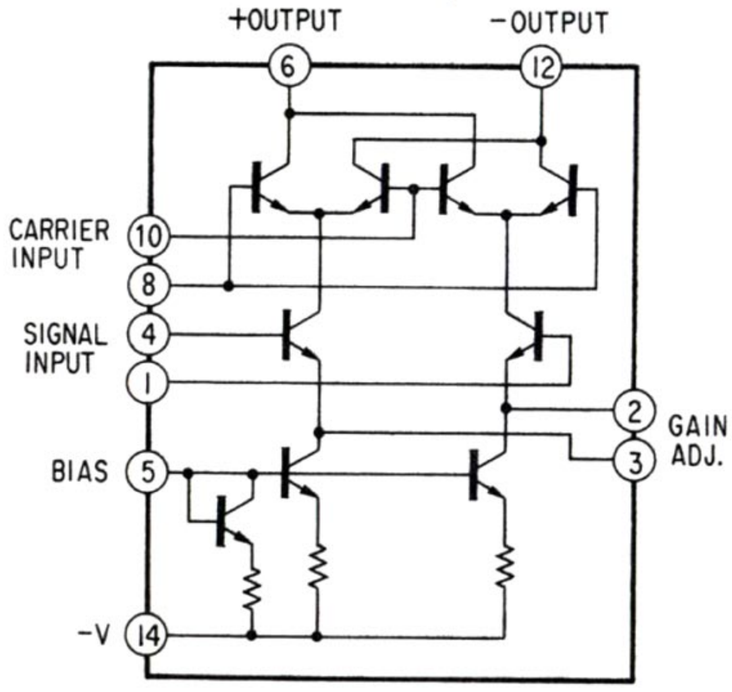

•μPC1163H (FM IF Amp. IC)

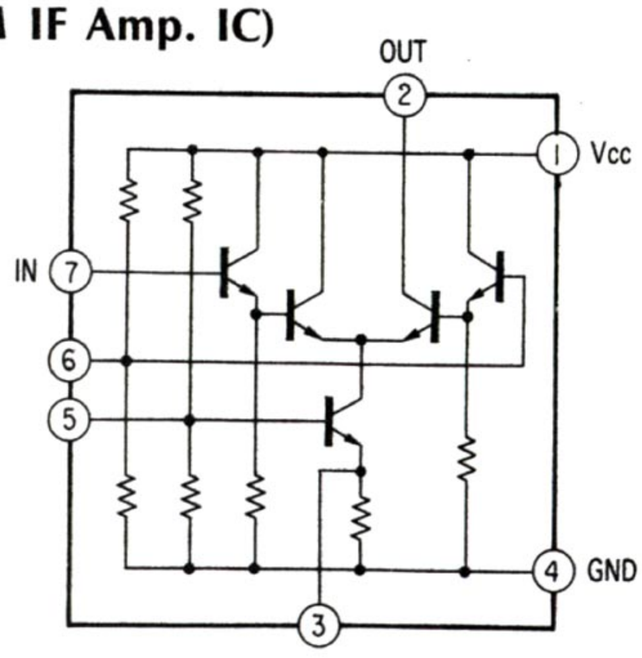

•TC4022BP (8 Count Divider IC)

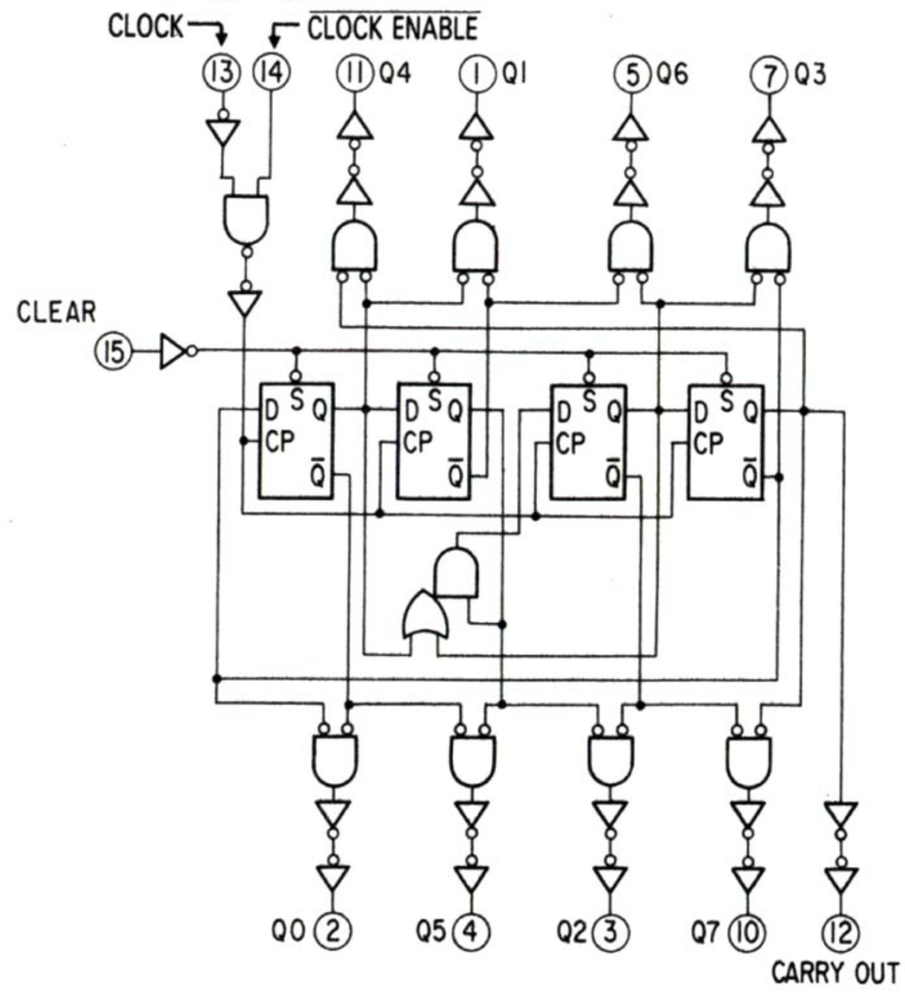

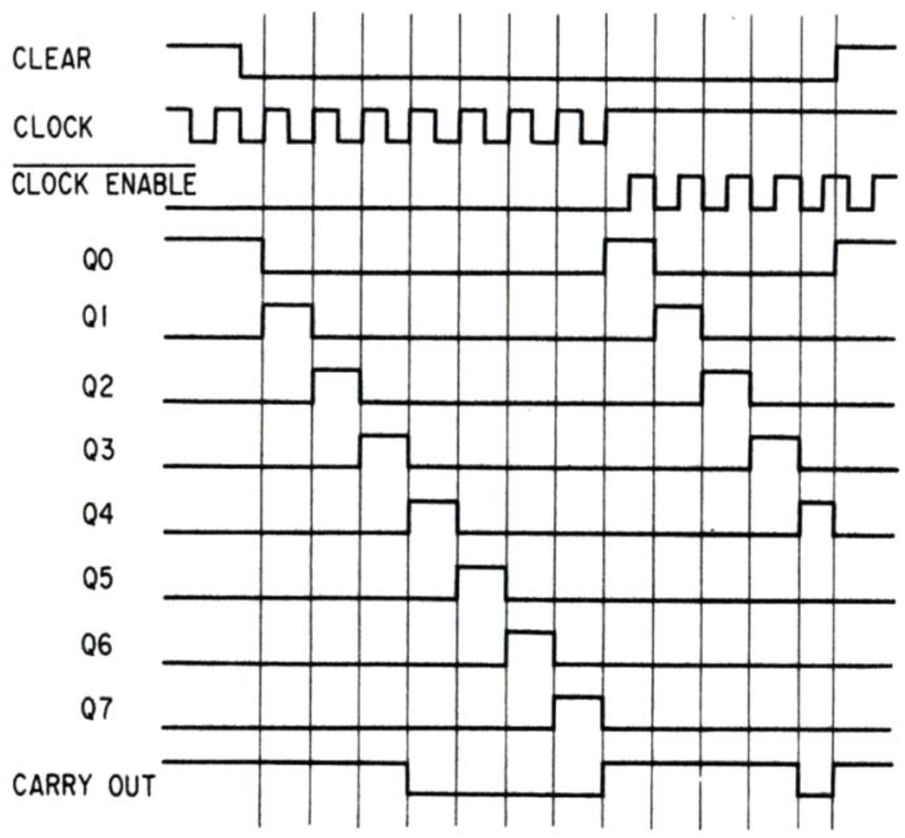

•HA12412 (FM Detector IC)

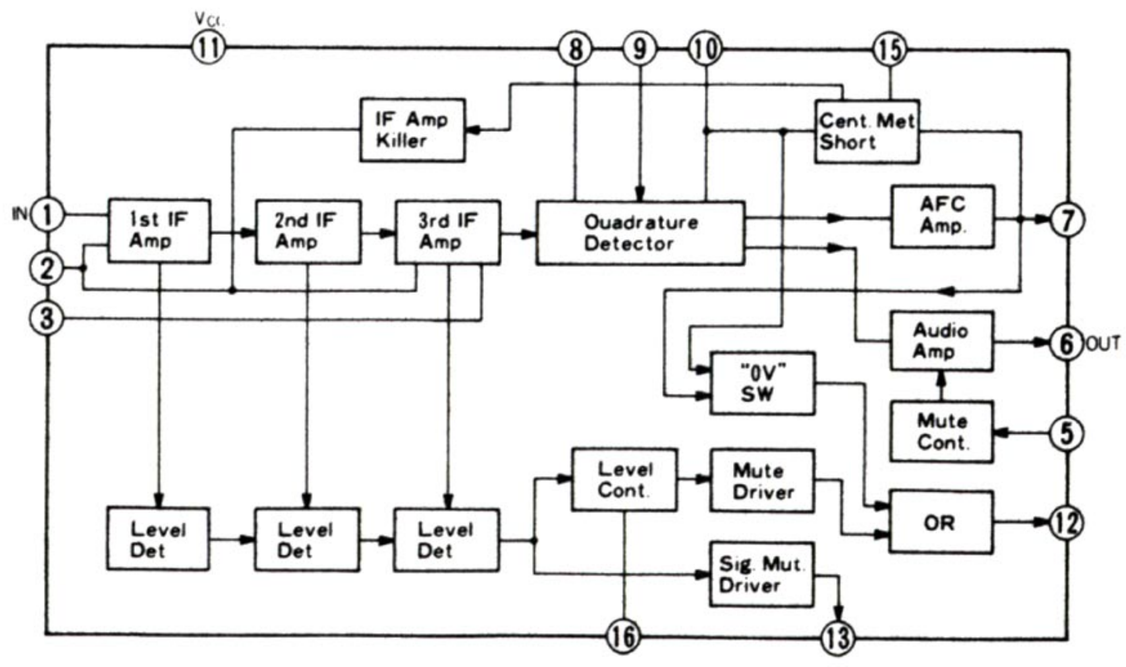

www.hifiengine.com

•TC9157P (PLL & Control IC)

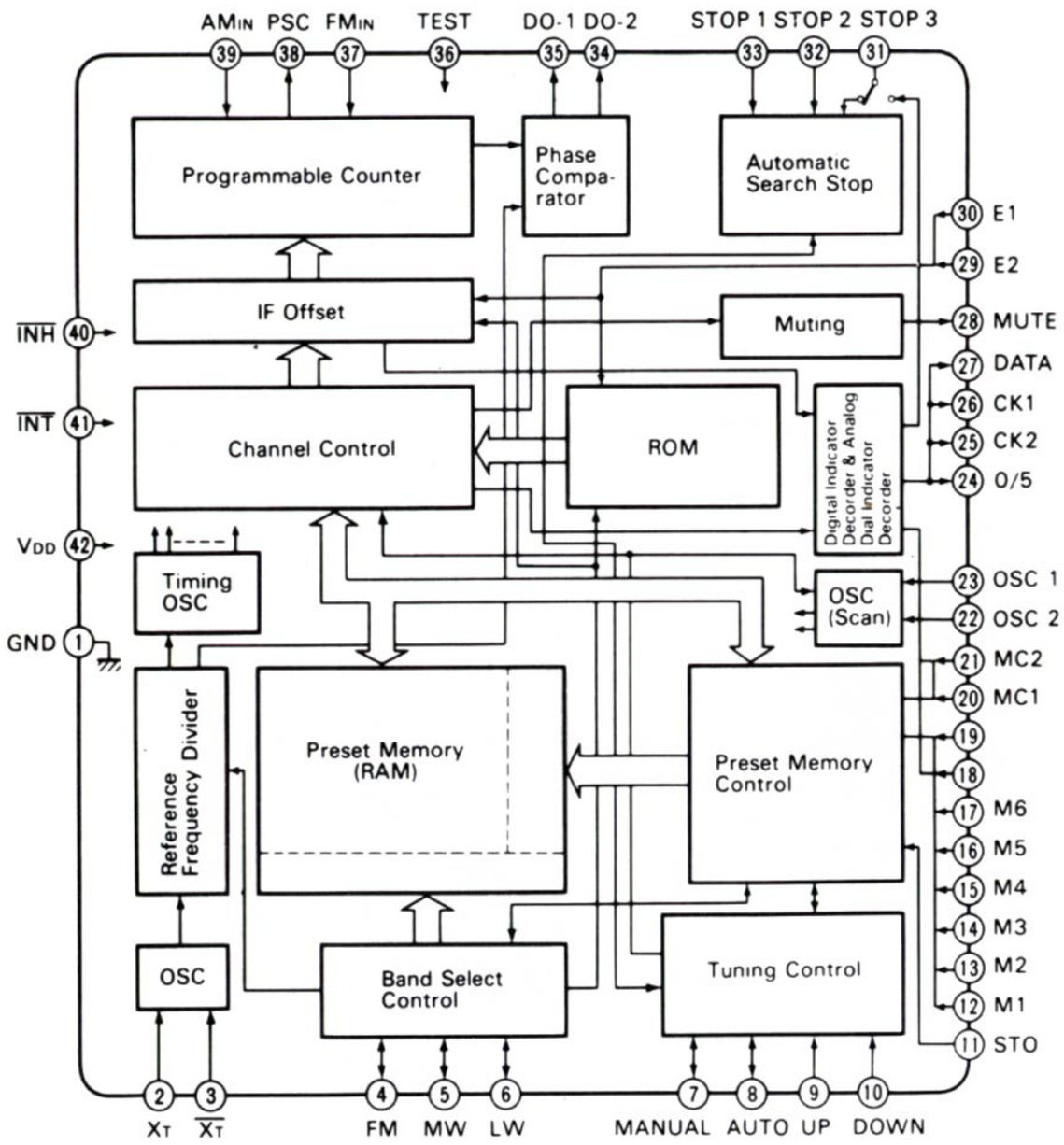

•TD6301 (7-Segment Decoder IC)

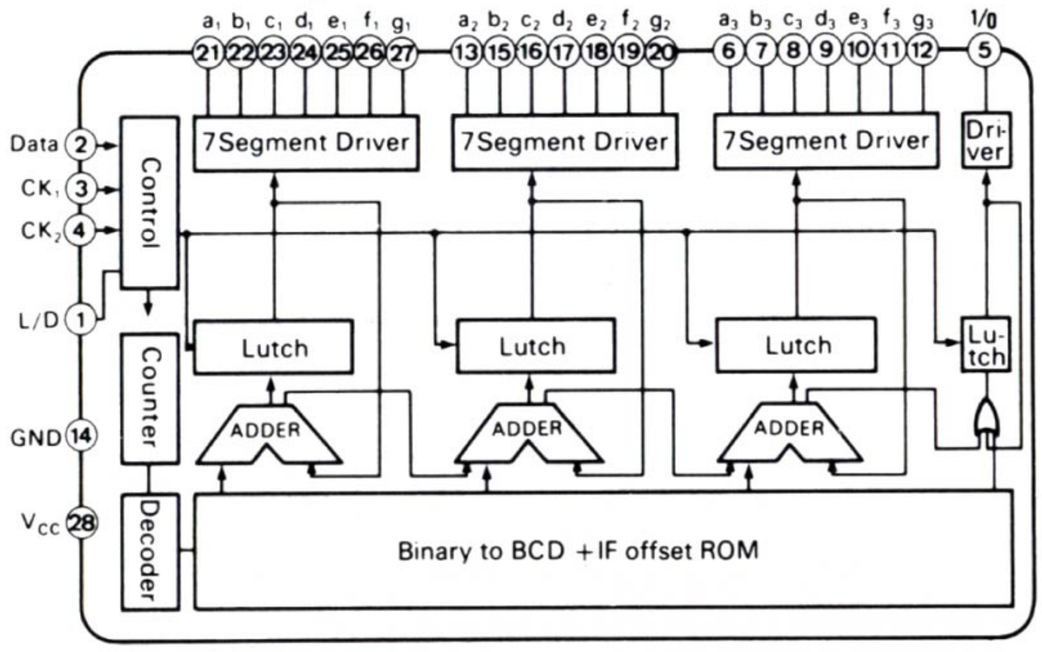

•TD6104P (Prescaler IC)

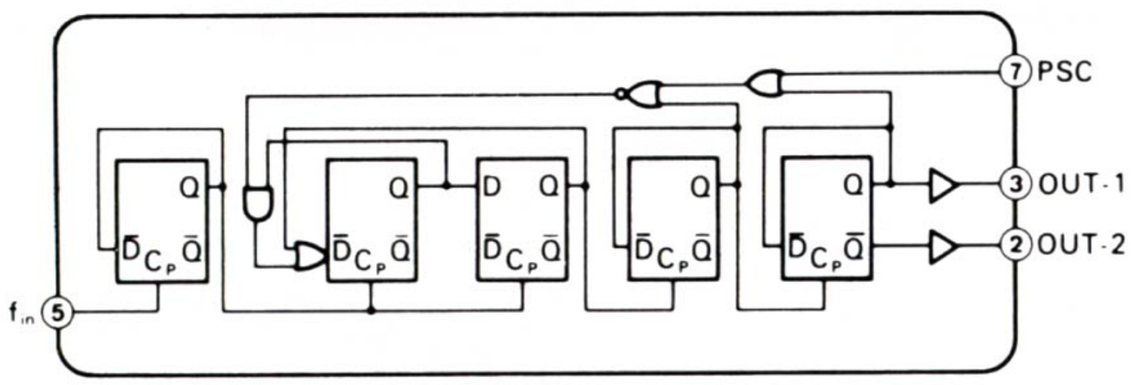

•LA1245 (AM Tuner IC)

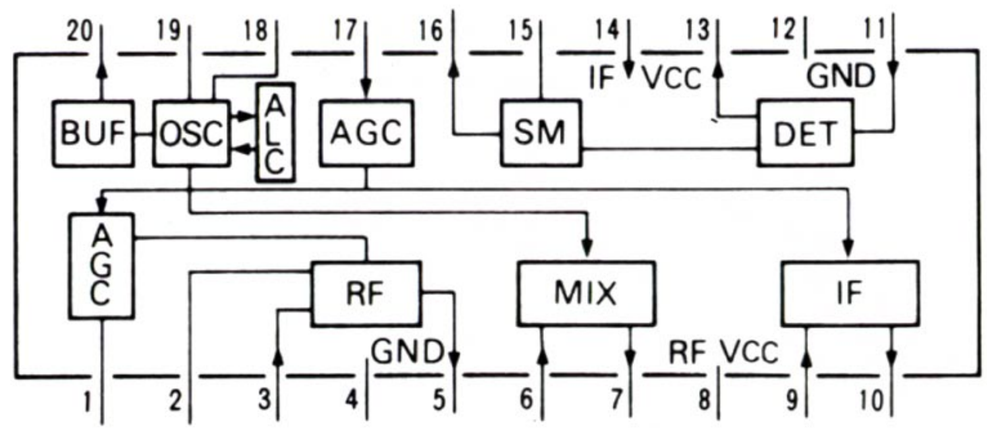

•BA6125 (L.E.D. Drive IC)

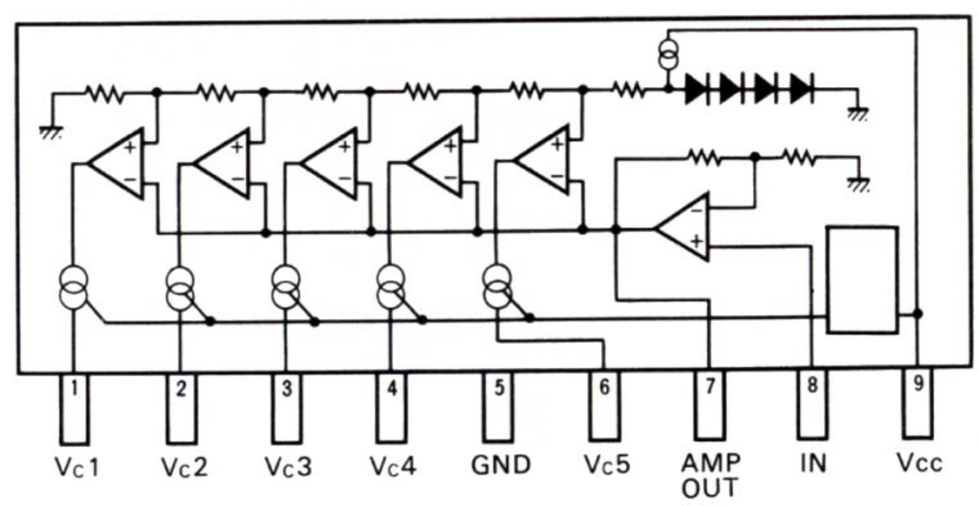

•MSM4030RS (Quad EXOR IC)

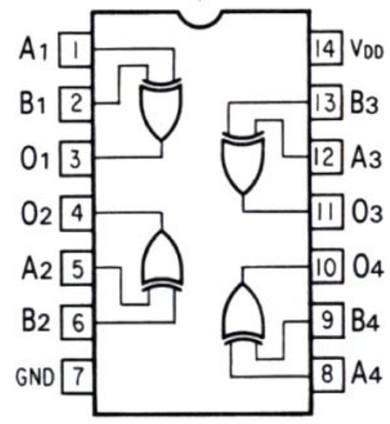

A	B	OUT
L	L	L
H	L	H
L	H	H
H	H	L

www.hifiengine.com

7. TERMINAL FUNCTION OF TC-9157P, TD6301P & TD6104

• Terminal Function of LSI-TC9157P

Pin No.	Pin Name	Functions
2,3	X_T $\overline{X_T}$	Terminals to connect a quartz oscillator for generating a reference frequency.
4 5 6	FM MW LW	Terminals to input a signal for switching FM/MW/LW band.
7 8	MANUAL AUTO	Terminal to input a signal for switching the manual operation to automatic search operation or vice versa in the UP/DOWN tuning mode. "H": Automatic, "L": Manual
9 10	UP DOWN	Terminals to input a signal from the tuning key. * In manual operation: When the key is kept depressed for 0.3 sec or more in one-step/one-push step feeding, the operation changes to fast forwarding; when the key is released, the operation stops at the next stop. In this case, even if there is a station on the way, the station is neglected. * In automatic search operation: When the key is depressed once, the automatic search operation starts and stops automatically after having selected the desired station.
11	STO	Terminal to input a signal for storing data in the preset memory unit. Input/output terminal in which a LED driver is provided. * When depressing the STO key, the STO lamp comes on. Next, when any desired memory No. key is depressed, the data on receiving frequency is written into the memory unit and the STO lamp goes off. * When the STO key is depressed and the memory No. key is not depressed, the frequency data is released automatically.
12 ~ 17	M1 ~ M6	Terminals to input a signal for designating memory address. Input/output terminals in which a LED driver is provided. * Terminals M_1 to M_6 designate the addresses of FM memory unit in FM receiving and the addresses of AM memory unit in AM receiving. * When depressing the STO key and any desired station key of M_1 to M_6, the data is written into the memory unit. * When depressing any desired station key of M_1 to M_6, the data is read out.
22 23	OSC 2 OSC 1	Terminal to connect a condenser and resistor for the oscillator for determinating the speed of AM automatic search operation. Terminal to connect a condenser and resistor for the oscillator for determinating the speed of FM automatic search operation.
24 25 26 27	0/5 CK2 CK1 DATA	Terminals to output the data for displaying the received frequency digitally and a timing signal. The data fed to the driver TD6301P for displaying a static frequency and the timing signal are outputted once only when the frequency is updated in such case as when the power supply is tuned on, the UP/DOWN key is depressed, the automatic scanning operation is made, the data are read out of the memory unit, or FM/AM is switched. In the ordinary receiving state, this terminal is fixed to a "L" level. * 0/5: For displaying 50 kHz during FM receiving in Europe. * Data: Binary coded frequency data and receiving band. * CK-1, CK-2: Initialize and transfer clock signals.

Pin No.	Pin Name	Functions
28	MUTE	Terminal to output the muting signal. The terminal is kept in "L" level in ordinary state, and in "H" level in muting.
29 30	E2 E1	Terminals to input a signal for selecting destinations of Japan, USA, and Europe. E_1 E_2 Mode 0 0 Japan 1 0 Europe 0 1 USA (MW 9kHz) 1 1 USA (MW 10kHz) * Inputs of terminals E_1 and E_2 are read and latched in INH = L state and in FM/AM switching.
31	STOP 3	When a IF450 kHz signal is applied to this terminal during automatic search operation, the scanning operation stops.
32	STOP 2	Terminal to input a signal for performing the automatic search stop. When a "H" level signal is applied to STOP 1 and this terminal during automatic search operation, the scanning operation stops.
33	STOP 1	Terminal to input a signal for slowing the speed of scanning operation. When a "H" level signal is applied to this terminal during automatic search operation, the speed of scanning operation halves.
34 35	D_0-2 D_0-1	Terminals to output a signal from a phase comparator. These terminals can be used for FM and AM, separately, since the same signal is outputted from the terminals D_0-1 and D_0-2 at the same time.
36	TEST	Terminal to input a signal of test mode. Test mode in "H" level.
37	FM_{IN}	Terminal to input a signal from the FM programmable counter. An amplifier is provided in the input.
38	PSC	Terminal to output a signal for controlling the Prescaler IC of TD6104P.
39	AM_{IN}	Terminal to input a signal from the AM programmable counter. An amplifier is provided in the input.
40	INH	Terminal to input a signal of inhibit. Ordinary operation in "H" level; inhibit operation in "L" level.
41	INT	Terminal to input an initialize signal. This terminal changes to H level in the ordinary operation and to L level in the initialize operation.
42 1	V_{DD} GND	Power supply terminals. 5V ± 0.5V.

• Terminal Functions of LSI-TD6301P

Pin No.	Pin Name	Description of Function and Operation
1	L/D	Terminal to input a signal for switching the output conditions. The output conditions are switched in accordance with the indicator display (LED, FL, LCD).
2	Data	Terminal to input the received frequency data. The data are inputted in series from the system controller TC9140.
3, 4	CK_1, CK_2	Terminals to input a timing signal for controlling the input of the received frequency data. The timing signal is transferred together with the data from the system controller TC9140.
5	1/0	Terminal to output a signals for driving the 7-segment display. A digit representing 100MHz in FM receiving and 1000 kHz in AM receiving is displayed. Only one pin is provided because the output is 1 or 0 in FM and AM, respectively.
6 ~ 12	a3 ~ g3	Terminal to output a signal for driving the 7-segment display. A digit representing 10 MHz in FM receiving and 100 kHz in AM receiving is displayed.
13, 15 ~ 20	a2 ~ g2	Terminals to output a signal for driving the 7-segment display. A digit representing 1 MHz in FM receiving and 10 kHz in AM receiving is displayed.
21 ~ 27	a1 ~ g1	Terminal to output a signal for driving the 7-segment display. A digit representing 100 kHz in FM receiving and 1 kHz in AM receiving is displayed.
14, 28	Vcc. GND	Power supply terminal

• Terminal Function of LSI-TD6104P

Pin No.	Pin Name	Description of Function and Operation
2	OUT-2	Terminal to output an inversed signal of terminal OUT-1. An additional resistor is necessary because of an open-emitter circuit. This terminal is kept open in the ordinary state.
3	OUT-1	Terminal to output a signal obtained by dividing the input signal from the division frequency output terminal fin into 1/30 or 1/32. * Output level: 0.5(V) minimum.
5	fin	Terminal to input a signal from the FM local oscillator. * Frequency range: 60 ~ 140 MHz * Input level: 75 ~ 300 mVrms
6	C	Terminal to connect a pass-condenser for the bias circuit. A condenser of 2200 pF is connected between this terminal and ground.
7	PSC	Terminal to switch the frequency division ratio. Vpsc ≧ 2(V): 1/32 Vpsc ≦ 1(V): 1/30
1 4	Vcc GND	Power supply terminal Vcc = 5V Icc = TYP 5mA, MAX 10mA Ground

8. SIDE PANEL L(R) REPLACEMENT

1) Remove the bonnet and two screws Ⓢⓐ.
2) Shift the position of the side panel L(R) 1.5 cm in the arrow direction ①.
3) Remove F-4377 circuit board.
4) Remove the hooks ② of the side panel from front panel and then pull it to the arrow direction ③ to remove the side panel L(R).

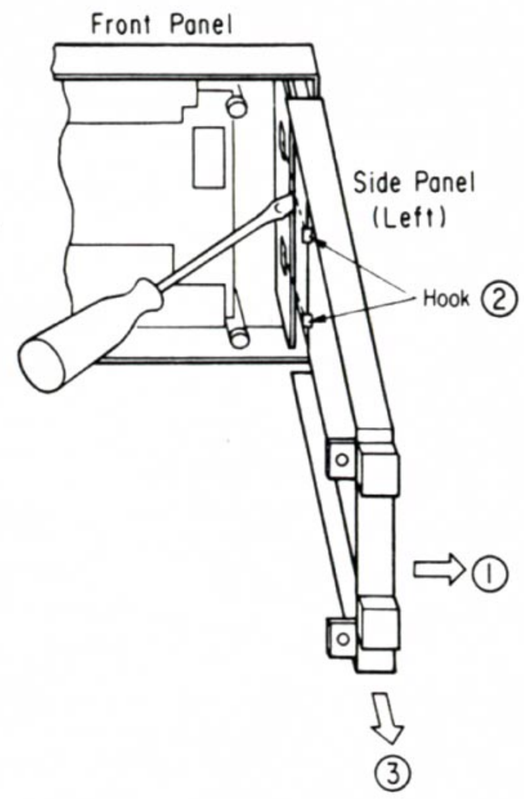

9. NOTES

When the user moves to different channel step area on FM or AM, the following arrangements must be performed.

	Sets Applicable to	Channel Step Frequency		fIC1 Input Port Level		Cross Conductor (F-4372)				9k/10k Switch oS2
		AM kHz	FM kHz	E_1	E_2	JW18	JW19	JW20	JW21	
I	South Africa	9k	50k	L	L	○	○	—	—	None
	Europe	9k	50k	H	L	—	○	○	—	None
	America	9k	100k	L	H	○	—	—	○	None
	America	10k	100k	H	H	—	—	○	○	None
II	Sets which 9k/10k Switch is installed	9k	100k	L	H	—	—	—	○	9 kHz
		10k	100k	H	H					10 kHz

•**Note:** 1) L = Low Level, H = High Level, ○ = Connect, — = Remove
2) oS2 = AM 9k/10k Switch on F-4372
3) Remove the 9k/10 kHz switch only when a user operates the set (II) in 50 kHz channel step (I)

10. PACKING LIST

Parts No.	Stock No.	Description
1	91166930	Vinyl Bag
2	47325700	Styrofoam Packing
3	47324800	Carton Case (TU-S77X)
	47324700	Carton Case (TU-S77XW)

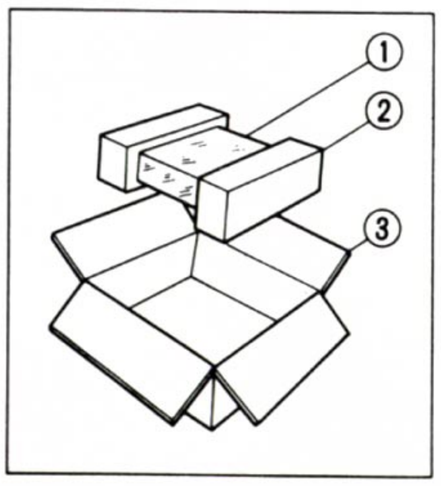

11. ACCESSORY LIST

Stock No.	Description
07233600	F-type Connector (Male)
46051700	FM Antenna
46548700	AM Loop Antenna
07193400	Pin Plug Cord
46726200	Operating Instruction

Note: TU-S77XW are models which add wood side panels to TU-S77X.

www.hifiengine.com

Sansui

SANSUI ELECTRIC CO., LTD.: 14-1, Izumi 2-chome, Suginami-ku, Tokyo 168 Japan
PHONE: (03) 324-8891/TELEX: 232-2076 (International Division)

SANSUI ELECTRONICS CORPORATION: 1250 Valley Brook Ave. Lyndhurst, N.J. 07071 U.S.A.
17150 South Margay Ave. Carson, California 90746 U.S.A.
3306 Koapaka 5t. Honolulu, Hawaii 96819 U.S.A.

SANSUI ELECTRONICS (U.K.) LTD.: Unit 10A, Lyon Industrial Estate, Rockware Avenue, Geenford, Middx UB6, OAA, England

SANSUI ELECTRONICS G.M.B.H.: Pau Ehrich Strasse 8, 6074 Rödermark 2, West Germany

(SM-110) Printed in Japan (035620M) <Stock No. 36484200>

www.hifiengine.com